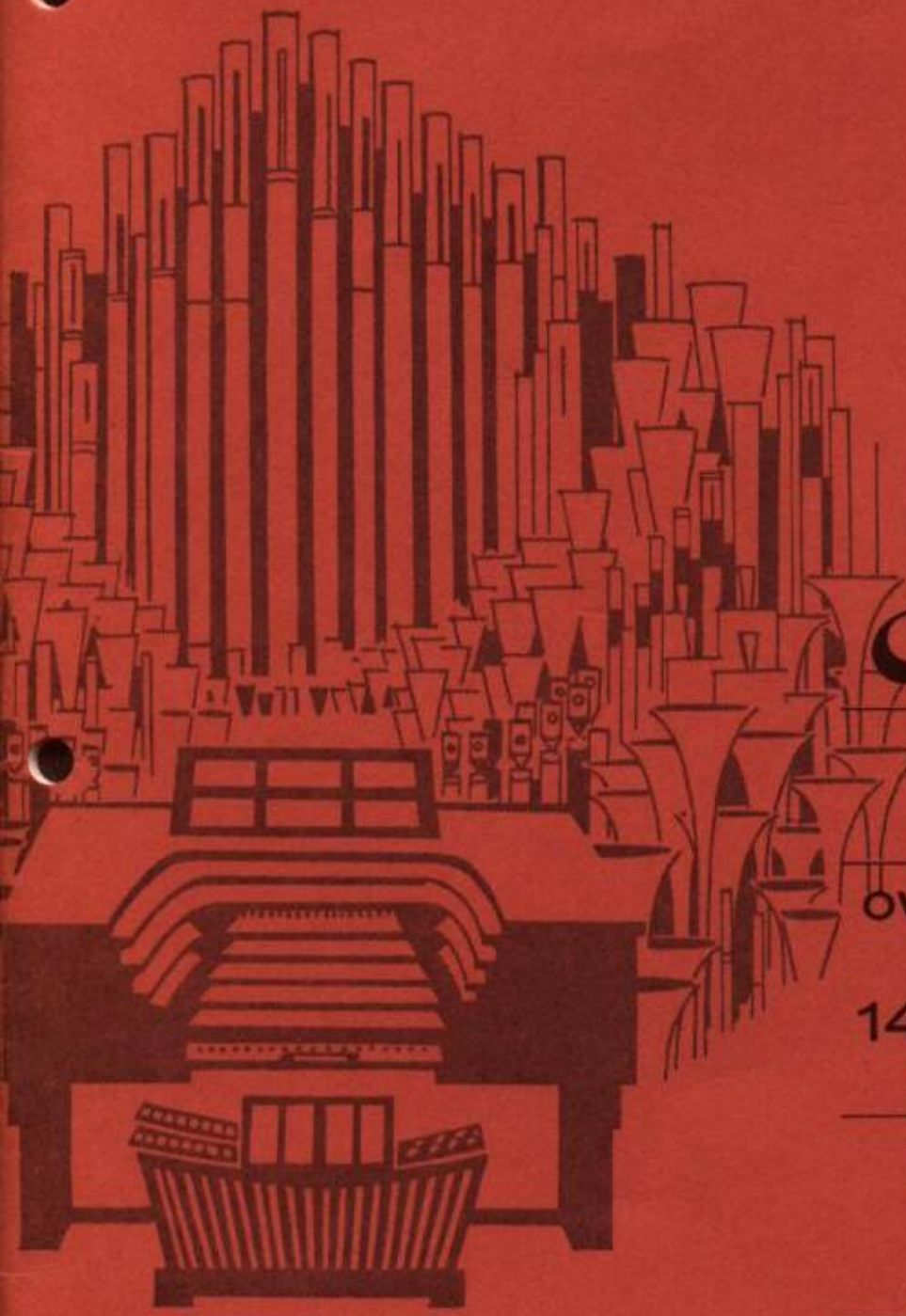

Leslie®
SPEAKERS

"PIPE VOICE OF THE ELECTRIC ORGAN"®

owner's manual models 145-147-147RV 247-247RV

Installation Instructions
Service Information
Parts List

electro music
Pasadena, California

LESLIE SPEAKERS
145/147/147RV
247/247RV

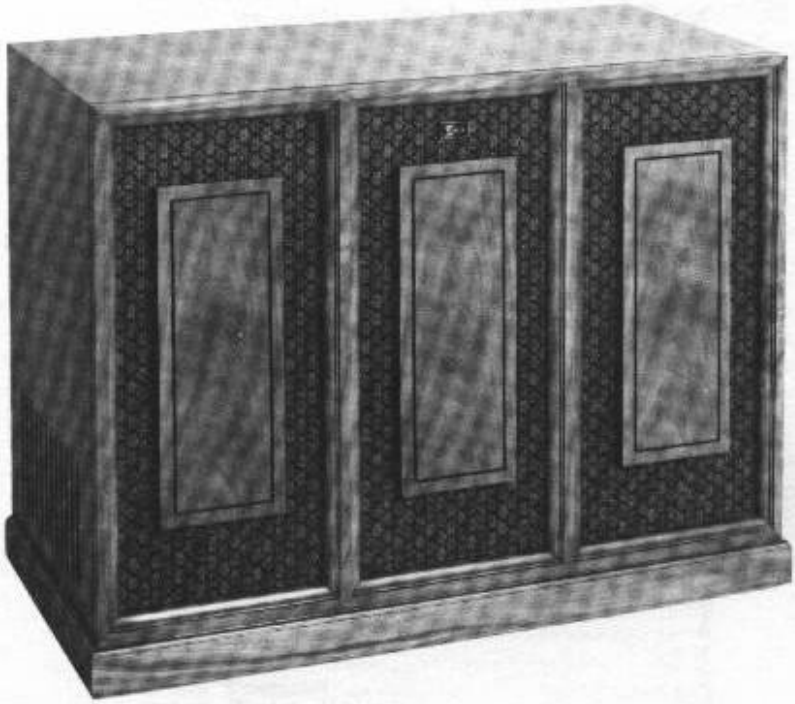

GENERAL OPERATING AND MAINTENANCE INSTRUCTIONS

ELECTRO MUSIC
CBS Musical Instruments
A Division of Columbia Broadcasting System, Inc.

Bin 30, Arroyo Annex
Pasadena, California 91109

January 1971
047159

CONTENTS

INTRODUCTION 1

SPECIFICATIONS 2

Cabinet 2
Dimensions 2
Loudspeakers 145/147/247 2
147RV/247RV 2
Electrical 2
Amplifiers 145/147/247 2
147RV/247RV 2
Power Consumption 145/147/247 2
147RV/247RV 2
Weight 2
Guarantee 2

OPERATION

PREPARING THE SPEAKER FOR USE 3

234 Volt/250 Volt Conversions (See pages 6 and 8 of this manual)
50/60 Cycle Conversions (See Parts List and Parts Identification Chart, pages 15 and 16 of this manual).

SPEAKER ADJUSTMENTS AND CONTROL 3

Load Resistor Setting (All Models) 3
Volume Control Setting (All Models) 3
Reverb Control Setting: (147RV/247RV Models Only) 3
Remote Reverb Control Kit 4

CONSOLE CONNECTOR KITS . 3

CONSOLE CONNECTOR CONTROLS 4

Echo Control 4
MAIN Position 4
ENSEMBLE Position 4
ECHO Position 4
Tremolo Control 4
CHORALE Position 4
TREMOLO Position 4
Rotor Brake Accessory 4

CONNECTING CABLE 4

MULTIPLE SPEAKER INSTALLATION 4

Power Requirements in Multiple Installations.. 4
Procedure for connecting additional speakers.. 4

SPECIAL USES..... 4

Broadcasting and Recording 4
Non Organ Use 4

SHIPPING 5

SERVICE

ORDERING PARTS 5

PREVENTIVE MAINTENANCE 5

Motor Lubrication 5
Checking Rotor Belts 5
Checking Amplifier Tubes 5
Checking Line Voltage 5

ELECTRICAL SERVICING

ROTOR AMPLIFIER 5

Rotor Amplifier Removal 5
Rotor Amplifier Replacement 6
Rotor Amplifier Tubes 6
Rotor Amplifier Electrolytic Capacitor 6
Removal/Replacement 6
Rotor Amplifier Fuses 6
Rotor Amplifier Distortion 6

ROTOR AMPLIFIER TRANSFORMERS 6

Rotor Amplifier Transformer Removal 6
Rotor Amplifier Transformer Replacement .. 6
234 Volt/250 Volt Rotor Amplifier Power Transformer 6
234 Volt to 250 Volt Conversion 6
250 Volt to 234 Volt Conversion 6

REVERB AMPLIFIER 7

(147RV/247RV MODELS ONLY)

Reverb Amplifier Removal — 147RV 7
Reverb Amplifier Removal — 247RV 7
Reverb Amplifier Replacement (147RV/247RV) 7
Reverb Amplifier Tubes 7
Reverb Amplifier Electrolytic Capacitor 7
Removal/Replacement 7
Reverb Amplifier Fuses 7
Reverb Amplifier Distortion 8

REVERB AMPLIFIER TRANSFORMERS 8

Reverb Amplifier Transformer Removal 8
Reverb Amplifier Transformer Replacement . 8
234 Volt/250 Volt Reverb Amplifier Power Transformer 8
250 Volt to 234 Volt Conversion 8

MECHANICAL SERVICING

50/60 Cycle Conversions
(See Parts List and Parts Identification Chart, pages 15 and 16 of this manual)

Drive Belts

Lower Rotor Belt 9

Lower Rotor Belt
Adjustment: 145/147/147RV 9
247/247RV 9
Lower Rotor Belt Removal (All Models) 9
Lower Rotor Belt Replacement (All Models) . 9
Upper Rotor Belt 9
Idler Pulley Adjustment (All Models) 9
Upper Rotor Belt Removal 9
Upper Rotor Belt Replacement 9

TWO-SPEED MOTOR ASSEMBLY 9

Two-Speed Motor Assembly Removal 10
(All Motor Assemblies except 247/247RV Treble Rotor Motor Assemblies) 10
Two-Speed Motor Assembly Removal 10
(247/247RV Treble Rotor Motor Assembly) 10
Two-Speed Motor Assembly Replacement 10

Disassembly of 2-Speed Motors for Cleaning and Lubrication 11
Small Motor Disassembly
(All Motor Assemblies except 247/247RV Treble Rotor Motor Assemblies) 11
Small Motor Disassembly
(247/247RV Treble Rotor Motor Assembly) 11
Large Motor Disassembly
(All Motor Assemblies except 247/247RV Treble Rotor Motor Assemblies) 11
Large Motor Disassembly
(247/247RV Treble Rotor Motor Assembly) 11
Cleaning and Lubricating of Large and Small Motors (All Models) 11
Reassembly of Large and Small Motors (All Models) 11

Small Motor Shaft Adjustment (All Small Motors) 12
Motor Noises 12

LOUDSPEARKER AND DIVIDING NETWORK

SERVICING: 12

Speaker Problems 13
Treble Speaker Removal and Replacement 13
Bass Speaker Removal and Replacement 13
Reverb Speaker Removal and Replacement (147RV/247RV Models Only) 13
147RV Removal 13
247RV Removal 13
147RV/247RV Speaker Replacement 13
Horn Reflector Replacements 13
Treble Rotor Removal and Replacement 13

Bass Rotor UPPER Bearing Removal and 14
Replacement 14
Bass Rotor LOWER Bearing Removal and 14
Replacement 14
Bass Tremulant Rotor Removal and 14
Replacement 14
Dividing Network 14
Dividing Network Removal 14
Dividing Network Replacement 14
Exploded View: 145/147/147RV Speakers w/Parts List 15

Exploded View: 247/247RV Speakers w/Parts List 16

Schematic: 234/250 Volt Rotor and Reverb Amplifiers w/Parts List 17

Schematic: 117 Volt Rotor and Reverb Amplifier 18

Parts List: 117 Volt Rotor and Reverb Amplifiers 19, 20

INTRODUCTION

LESLIE SPEAKER MODELS:
145/147/147RV/247/247RV

The five speakers covered in this Service Manual were designed for use with a wide variety of organ models. The unique internal design common to all five speakers incorporates an 800 hz crossover network to separate and channel treble and bass ranges through treble and bass speakers for greater frequency response.

Patented LESLIE rotary elements provide tremolo effects while rotating at fast speed and a contrasting effect known as chorale when they turn at very slow speed.

In the 147RV and 247RV speakers, a reverb channel is added to further enhance the organ's capabilities. The 147RV reverb amplifier drives one high-efficiency 6"x9" speaker while the 247RV uses two 6"x9" speakers for this purpose.

Figures 1 and 2 trace the signal path from the main speaker amplifier to the speakers. Figure 1 covers models 145, 147, and 247. Figure 2 illustrates models 147RV and 247RV.

145 147 247 MODELS

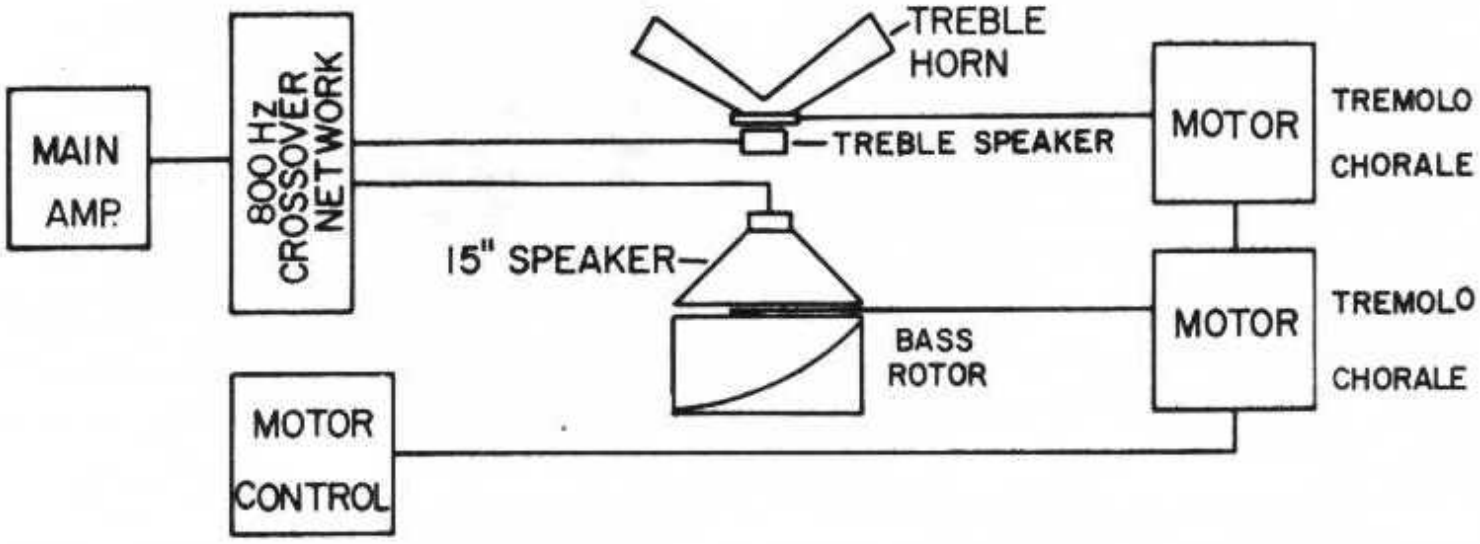

FIG. 1

147RV 247RV MODELS

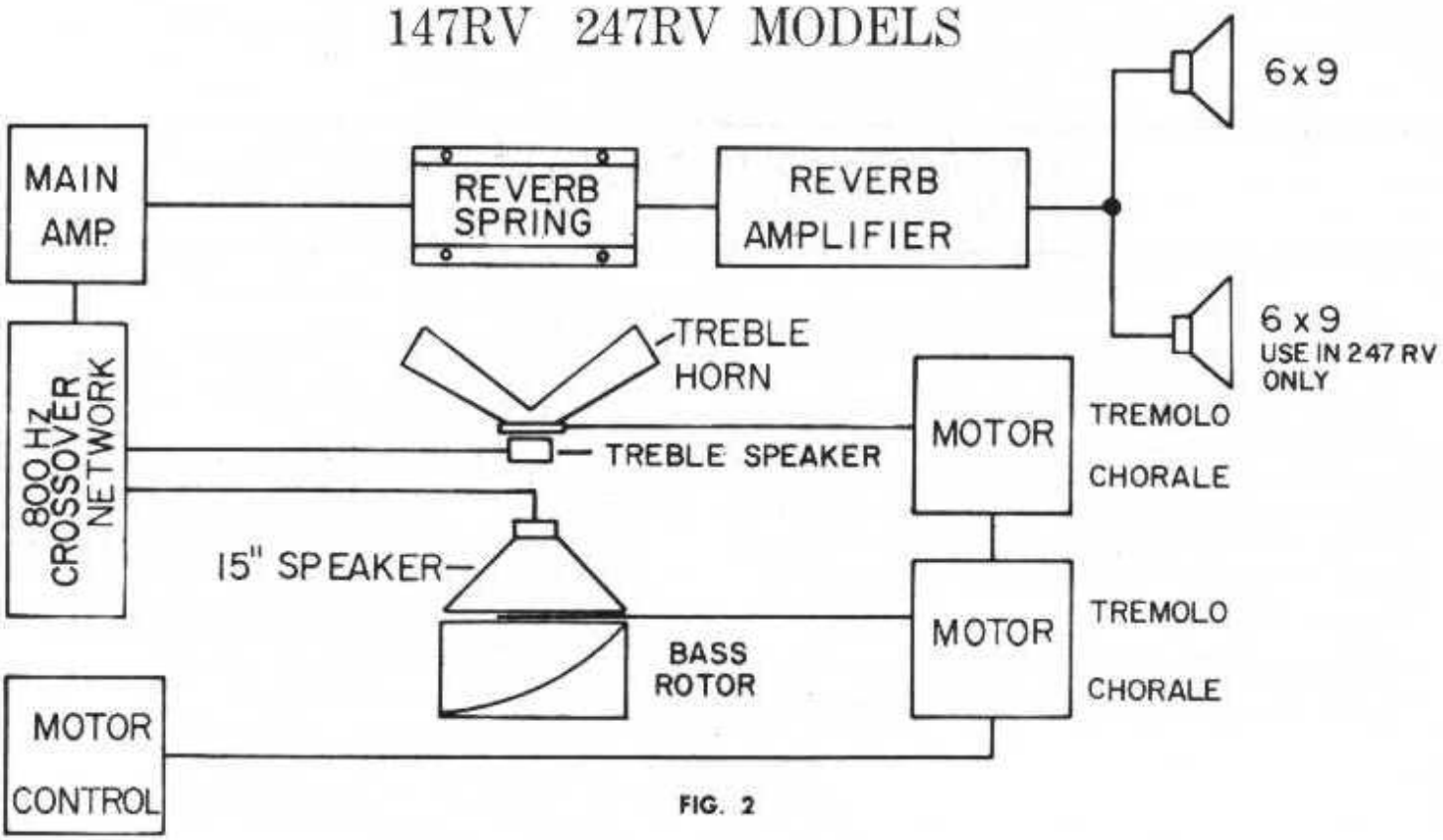

FIG. 2

SPECIFICATIONS:

CABINET:

All Models: Selected hardwood veneers with quality lacquer finish in woods and colors to harmonize with organ consoles.

DIMENSIONS:

Model 145: 33" high, 29" wide, 20½" deep.
Model 147: 147RV: 41" high, 29" wide, 20½" deep
Model 247: 247RV: 30" high, 42½" wide, 22¼" deep

LOUDSPEAKERS:

Models 145,147,247:
Treble: Compression-type driver, permanent magnet, 16 ohms impedance
Bass: 15 inch heavy duty permanent magnet, 16 ohms impedance
147RV,247RV:
Treble: Compression-type driver, permanent magnet, 16 ohms impedance
Bass: 15 inch heavy duty permanent magnet, 16 ohms impedance
Reverb:
147RV: One wide-range 6"x 9" permanent magnet, 16 ohms impedance
247RV: Two wide-range 6"x 9" permanent magnet, 16 ohms impedance each.

ELECTRICAL:

All models available in 117 volt, 50/60 Hz and 234 volt/250 volt 50 Hz versions.

AMPLIFIERS:

Models 145, 147, 247: 1 channel, 40 watts output
Models 147RV, 247RV: Main and reverb amplifier provide 2 channels, with combined output of 56 watts

POWER CONSUMPTION:
Models 145,147,247:190 Watts, 2.1 Amps
Models 147RV; 247RV: 250 Watts, 2.7 Amps

WEIGHT:

Model:

145:	135 pounds net, 154 pounds boxed for shipment
147:	149 pounds net, 166 pounds boxed for shipment
147RV:	152 pounds net, 169 pounds boxed for shipment
247:	138 pounds net, 156 pounds boxed for shipment
247RV:	142 pounds net, 161 pounds boxed for shipment

GUARANTEE:

ALL MODELS: Guaranteed for one year from the date of purchase, covering both workmanship and materials. This guarantee does not include vacuum tubes, which are guaranteed by their manufacturer, and does not cover belts or speaker cones which may wear out in less than one year due to severe usage.

OPERATION

PREPARING SPEAKER FOR USE:

After unboxing the speaker:

1. **145/147/147RV Models: Remove both upper and lower compartment back covers. 247/247RV models: Remove the lower compartment back cover.**
2. **Remove shipping blocks from the motor assemblies.**
3. **Make sure the treble belt is in place on the treble rotor's 3-step pulley, idler pulley, and motor pulley. Treble belt is located in lower right corner behind amplifier in models 247/247RV; upper shelf of models 145, 147 and 147RV.**
4. **Now select the groove in the treble motor's 3-step pulley which provides treble rotor speed desired. The center groove is most commonly used. For faster or slower rotor speeds use smaller or larger diameter grooves.**
5. **Replace the compartment back covers.**
6. **Remove the shipping skid and place the cabinet so that it rests solidly on the floor. If the floor is uneven, use snug-fitting wedges to prevent rocking.**
7. **Plug the speaker connecting cable into the** speaker amplifier and either directly into matching socket on organ console provided for LESLIE speakers, or into the console connector kit installed at organ for this purpose.

   CAUTION: Be sure line voltage matches speaker voltage before operating speaker. Amplifiers are marked 117 volts, 234 volts, or 250 volts.
8. **(147RV/247RV only): At back center of cabinet, loosen screw on plate and turn plate 180 degrees. Remove packing slug. Replace plate.**

234/250 VOLT CONVERSIONS (High Voltage Speakers Only): See pages 6, 8 of this manual.

SPEAKER ADJUSTMENTS AND CONTROLS:

LOAD RESISTOR SETTING (All Models):

The console load resistor switch is located on the rotor amplifier chassis. This switch provides a load of the correct impedance for the console power amplifier when the console speakers are not operating. The correct load resistance is indicated in the installation instructions for the console connector kit used.

If you do not know the correct console load impedance, the switch may be set by the following procedure:

1. Set the Echo Control on "Echo", and the load resistor switch at "8".
2. Turn all the console stops on, set the swell pedal at maximum, and play a full chord and a single pedal note.
3. While sounding this chord, advance the volume control until some distortion occurs.
4. Switch the Echo control back and forth from "Echo" to "Main" and compare the speaker volume to the console volume. If the speaker volume is greater than the console volume, load resistance is satisfactory. If it is not, repeat the above procedure with the load resistor switch set at "16" and "Open." Choose the switch position which gives the greatest volume from the speaker without distortion. The volume control should be set between 6 and 10.

ROTOR AMPLIFIER VOLUME CONTROL SETTING: (All Models)

The volume level should be set on the basis of maximum demand, avoiding distortion or overload, as follows:

1. Use "full organ" registration, that is, with all stops in use and with the swell pedal at maximum. Play a full chord and a single note.
2. Advance the volume control on the amplifier from a minimum position up to a point where some distortion can be heard.
3. Back off the volume control setting just far enough to eliminate all distortion. This is the correct setting for maximum undistorted loudness, and usually no further adjustment will be necessary. (Distortion, when continuous, can seriously damage speaker components.)

REVERB AMPLIFIER CONTROL SETTING (147RV/247RV Models Only)

The reverberation volume is adjusted at the controls shown in Fig. 3. The desired amount of reverberation volume is up to the individual's taste. Turn control clockwise to increase volume. See diagram for control location.

REMOTE REVERB CONTROL KIT

With this handy unit, the organist can select the reverb effect desired directly from the organ console. Complete installation instructions are included with the remote control. Available through your LESLIE speaker dealer in brown (015255), ebony (015305), or ivory (015313).

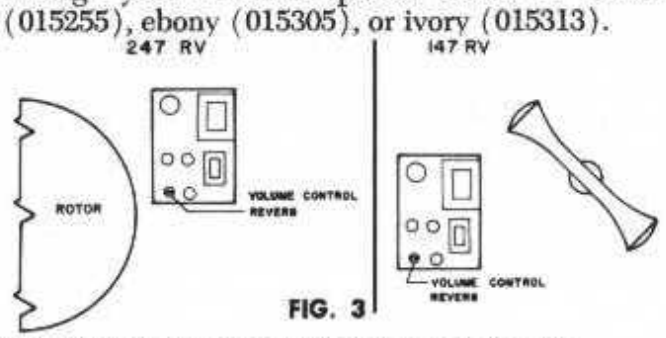

FIG. 3

CONSOLE CONNECTOR KITS

Many types of organs can be adapted for LESLIE speakers by using the appropriate LESLIE console connector kit. Consult the LESLIE Speaker Data Sheet for your make organ to find the proper console connector kit for your particular organ/speaker combination.

INSTALLATION:

See instructions packed with console connector designed for your organ/speaker combination.

CONSOLE CONNECTOR CONTROLS:

ECHO CONTROL

MAIN POSITION: With ECHO switch in this position, only organ's internal speaker will operate.
ENSEMBLE POSITION: With ECHO switch in this position, both internal organ speaker and external Leslie speaker will operate.
ECHO POSITION: Only Leslie speaker will operate with ECHO switch in this position.

TREMOLO CONTROL

CHORALE POSITION. Small Motor is actuated in lower and upper motor assemblies to slow Bass and Treble rotors to "Chorale" speed. TREMOLO switch contacts are "made" in this position.

TREMOLO POSITION. Bass/Treble rotors operate at fast speed for Tremolo effect when Tremolo Control is switched to this position.

ROTOR BRAKE ACCESSORY

The Tremolo control's circuitry makes no provision for completely stopping the rotors. This is not necessary in normal use, since the slow movement of the rotors at "Chorale" speed provides a pleasing effect when playing sustained notes and is virtually imperceptable in more rapid musical passages.

Where unusual requirements make it necessary to completely stop the rotor, an accessory brake may be installed. In most cases the 022186 brake should be used. However, for organ consoles with built-in LESLIE speaker controls, use the 022178 brake. Complete installation instructions are included with these brake kits.

CONNECTING CABLE

The 6-conductor connecting cable (017277) is supplied in a standard 30-foot length complete with plug and socket.

For longer console-to-speaker runs, two or more of these standard 30-foot cable assemblies may be connected in series.

In certain installations, a specific length of cable other than 30 feet is required. In such cases, bulk cable should be ordered, along with the necessary connectors, as specified in the parts list. In attaching the connectors to the cable the color coding should be followed exactly, with special care being given to all AC connections.

MULTIPLE SPEAKER INSTALLATION

When a particular installation requires greater volume than is obtainable without distortion from a single LESLIE speaker, additional speakers (with amplifier) may be added. Even where no additional sound volume is needed, a second LESLIE speaker enhances any installation, adding fullness, and a richer pipe-like quality to the sound. Although the relative location of the two cabinets is not critical, it is usually possible to obtain a very interesting overall effect by placing the two speakers 15 to 20 feet apart.

All the speakers used in a multiple installation **must** be equipped with amplifiers. The speakers are connected together, with the first speaker in the "chain" connected to the console, the second speaker connected to the first, the third connected to the second, etc.

Procedure for connecting additional speakers:

1. Connect the speaker end of the console connecting cable to the power relay.
2. Connect the power relay pigtail to the speaker.
3. Plug the connecting cable for the additional speaker into the receptacle on the power relay.
4. Plug the line cord from the power relay into the nearest AC outlet.

This procedure should be followed, using an additional power relay, for each speaker added to the system.

Power Requirements in Multiple Installations

For the second and all successive speakers in multiple speaker installations, a power relay should be used. In most multiple installations involving 147 type speakers, a 034496 power relay should be chosen. However, in Wurlitzer 4300, 4500, and 4520 installations, use the 035642 power relay. The power relay makes it possible to obtain AC power from a source external to the organ. This eliminates the possibility of overloading the organ's power circuit. The power switch at the console still controls power for all speakers used in multiple installations.

BROADCASTING AND RECORDING

When a LESLIE Speaker is used in a broadcast or recording set-up, allowance must be made for the limitations of the microphone. The microphone will not pick up exactly the same sound and effects heard in the studio. The ideal set-up can only be accomplished by experiment. Here are a few general recommendations for recording and broadcasting:

1. Select a fairly "live" studio.
2. Play the organ at medium to full volume level.
3. Place the microphone ten to fifteen feet from the speaker.
4. Do not place the microphone at the same height as the upper speaker.

NON-ORGAN USE OF THE LESLIE SPEAKER

The LESLIE Speaker is a high-quality product, designed expressly for use with electric organs and other musical instruments. The unique musical characteristics of this speaker are the result of electrical and acoustical properties very different from those found in "high-fidelity" sound equipment. The speaker will function satisfactorily only in its intended use as a musical instrument, and no other applications are recommended.

SHIPPING

The LESLIE speaker may be moved or carried in any position without special preparation. If it is to be shipped, however, the cabinet should be kept in an upright position, with shipping blocks in place to protect the motors and rotors.

SERVICE

ORDERING PARTS

Standard hardware, connectors, and electronic components may be obtained locally. Non-standard items may be obtained through a Leslie Speaker dealer. Orders should include part numbers provided in parts list in pages 17, 19 and 20 of this manual. Model and serial numbers should also be included.

PREVENTIVE MAINTENANCE

The LESLIE speaker is carefully engineered for durability and maximum service. Except for lubrication and periodic belt tension checks, the speaker requires little attention.

CAUTION: Keep hand and tools away from the spinning parts when adjustments are made inside the cabinet. The rotor's weight and momentum could cause personal injury or damage other Leslie components.

MOTOR LUBRICATION:

Usage, climate, and dust conditions determine motor lubricating requirements. In normal service, annual motor lubrication is usually sufficient. However, if the speaker is used several hours a day, lubrication every three to four months may be necessary. Remember that over-oiling a motor can be as detrimental as no lubrication at all. Motors which fail to start immediately may have dried up, dirt-clogged bearings. Motor cleaning and lubrication is covered on page 11 of this manual.

CHECKING ROTOR BELTS:

Although the bass and treble rotor belts normally last several years, they should be periodically checked. Worn or frayed belts cause noise and reduce rotor speed due to belt slippage. Instructions for replacement are given on page 11 of this manual.

CHECKING AMPLIFIER TUBES:

Speaker hiss, crackle, and other signal distortions indicate need for a tube check with a tube tester. In some cases, tube weakening and resultant sub-standard speaker performance may go unnoticed. It is a good idea to check tubes regularly and replace weak ones before they deteriorate completely. Don't overlook the reverb amplifier tubes in models 147RV/247RV.

CHECKING LINE VOLTAGE

Line voltages lower than 100 volts (200 volts in 234 volt models) or higher than 130 volts (260 volts in 234 volt models) will result in distortion due to too little power or overheated, burnt out components due to excessive voltage. A voltage regulating device readily obtainable at an electronic parts supply store will correct this problem. High voltage amplifier conversions to 234 volt or 250 volt line current are covered on pages 6 and 8 of this manual.

ELECTRICAL SERVICING

ROTOR AMPLIFIER

ROTOR AMPLIFIER REMOVAL: 145/147/147RV

1. Remove cabinet's lower back cover.
2. Disconnect all leads and power plugs from the rotor amplifier.
3. Find the screw in the center of the chassis mounting plate. This plate is located beneath the socket end of the amplifier. CAUTION: Do **not** remove the nuts at either end of this plate. They do not fasten the rotor amplifier to the cabinet.
4. Remove screw, then remove rotor amplifier by sliding it out of cabinet. (When replacing rotor amplifier, be sure the rear mounting plate engages with its mounting bracket.)

ROTOR AMPLIFIER REMOVAL: 247/247RV

1. Remove cabinet's lower backplate.
2. Disconnect all leads and power plugs from the rotor amplifier.
3. Remove screws in the center of the chassis mounting plates at either end of the amplifier. CAUTION: Do **not** remove the nuts on the four corners of the amplifier chassis. They do not fasten the rotor amplifier to the cabinet.
4. Remove the rotor amplifier from the cabinet.

ROTOR AMPLIFIER REPLACEMENT:

Reverse removal procedure previously outlined.

ROTOR AMPLIFIER TUBES

Tubes are a common source of amplifier difficulties, although amplifier malfunctions seemingly caused by tubes can be traced to other components. Certain tube deficiencies can be detected with a tube tester. However, replacement is also recommended for any tube in service over a considerable period of time, regardless of test results. Their performance has usually deteriorated, causing the amplifier to operate inefficiently.

ELECTROLYTIC CAPACITOR

The capacitor used by the rotor amplifier is a high-quality, four section unit rated at 30-30-30-10 mfd, 475 VDC. It should function perfectly for several years in normal use.

REMOVAL:

Unscrew the two nuts fastening capacitor mounting plate to the main amplifier chassis and unplug capacitor.

REPLACEMENT:

1. With wire snips, clip off case ground withqut a hole in it.
2. Align the three remaining case grounds to their respective holes in socket; plug in.
3. Replace capacitor mounting plate, using nuts to fasten mounting plate securely.

ROTOR AMPLIFIER FUSES

Both 117 volt and 234 volt/250 volt main amplifiers use a replaceable "Slo-Blo" 1½ amp. fuse for protection against short circuits. When a fuse fails, find the cause and eliminate it **before** replacing the fuse. Replacement fuses rated higher than 1½ amps. should never be used.

ROTOR AMPLIFIER DISTORTION

Distortion is usually the result of setting the amplifier volume control too high. (See page 3 for rotor amplifier volume control adjustment).

The extra gain designed into the Leslie amplifier to compensate for possible low console output should be used carefully. Maximum gain setting will usually cause distortion whenever the organ's expression pedal is fully open.

REMOVAL OF POWER OR OUTPUT TRANSFORMER

1. Disconnect transformer leads. Be sure to match the right color lead to its corresponding location. Draw a diagram showing terminals and wire colors to facilitate rewiring.

NOTE: (For output transformer only:)

Incorrect wiring of a replacement output transformer results in improper phasing which causes amplifier oscillation. It is also possible to reconnect leads correctly and still have this oscillation. If oscillation occurs, reverse leads from the secondary winding of the transformer at the speaker socket terminals.

REPLACEMENT OF POWER OR OUTPUT TRANSFORMER

1. Fasten new transformer in place, using mounting nuts provided.
2. Measure, clip, and solder new transformer leads to correct locations.

NOTE: Leads supplying plate voltage to the tubes should not be excessively long.

234 VOLT/250 VOLT POWER TRANSFORMER

A special 234 volt/250 volt power transformer is used in rotor amplifiers destined for countries using 234 volt or 250 volt line current. As line voltage may vary from country to country, both 234 volt and 250 volt transformer taps are provided. Factory-wired voltage is indicated by a sticker on top of the 234 volt/250 volt amplifier chassis. If this voltage does not match line voltage, convert to proper voltage as follows:

234 VOLT TO 250 VOLT CONVERSION:

1. Disconnect WHITE wire from fuse located next to console connector socket on amplifier chassis. (See Fig. 4A.)
2. Disconnect BROWN wire from two-lug terminal strip located next to load resistor switch. (See Fig. 4B.)
3. Solder WHITE wire to two-lug terminal strip at the lug formerly occupied by BROWN wire. See Fig. 4B.)
4. Solder BROWN wire to fuse lug formerly occupied by WHITE wire. (See Fig. 4A.)

Conversion to 250 volt line current is now complete.

250 VOLT TO 234 VOLT CONVERSION:

1. Disconnect BROWN wire from fuse located next to console connector socket on amplifier chassis. (See Fig. 4A.)
2. Disconnect WHITE wire from two-lug terminal strip located next to load resistor switch. (See Fig. 4B.)
3. Solder BROWN wire to terminal strip lug formerly occupied by WHITE wire. (See Fig. 4B.)
4. Solder WHITE wire to fuse lug formerly occupied by BROWN wire. (See Fig. 4A.)

Conversion to 234 volt line current is now complete.

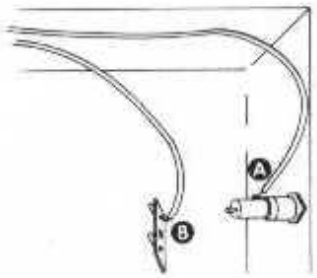

Fig. 4

IMPORTANT: (HIGH VOLTAGE 147RV/247RV SPEAKERS ONLY)

234 volt/250 volt rotor amplifiers in high voltage 147RV/247RV speakers have an AC socket marked "Reverb Amplifier" on their chassis. This socket is used to power the reverb amplifier used in these speakers. The voltage at this socket (either 234 volts or 250 volts, depending on line voltage) is intended to power a similarly set 234 volt/250 volt reverb amplifier.

Therefore, make certain line voltage, rotor amplifier voltage and reverb amplifier voltage match before using the 234 volt or 250 volt version of the 147RV/247RV speaker. 234 volt/250 volt conversions are covered under the amplifier power transformer sections of this manual.

REVERB AMPLIFIER

The reverb amplifier provides 16 watts of reverberated signal for driving either one or two wide range 6"x9" reverb speakers. The reverb amplifier control (see page 3 of this manual for reverb control adjustment instructions) can be supplemented by a convenient remote reverb switch. This switch gives the organist complete control of the reverb function directly from the console. It is available through your LESLIE Speaker dealer in a choice of brown (015255), ebony (015305), or ivory (15313).

147RV REVERB AMPLIFIER REMOVAL

1. Remove upper, middle, and lower back.
   CAUTION: When removing middle back cover, disconnect input and output leads to the reverb spring before completely detaching cover.
2. Disconnect dividing network and reverb speaker leads from their sockets on reverb amplifier. Reverb amplifier is located on left hand side of upper shelf.
3. Disconnect reverb amplifier power plug and RED/BLACK lead from their sockets on rotor amplifier chassis.
4. Remove cork from its hole in upper shelf and withdraw the reverb amplifier power plug, reverb spring leads, and RED/BLACK lead through the hole and onto the upper shelf.
5. Remove mounting screw from its hole in the center of mounting bracket located underneath the socket end of the reverb amplifier. NOTE: Do not remove nuts on ends of this chassis mount. They do not fasten reverb amplifier to the upper shelf.
6. Slide reverb amplifier to the rear and out of the cabinet.

247RV REVERB AMPLIFIER REMOVAL

1. Remove lower and upper cabinet back.
   CAUTION: Remove wires from reverb spring **before** detaching upper back plate.
2. After disconnecting all rotor amplifier wires, unscrew the two mounting screws holding rotor amplifier in cabinet and remove it.
3. Disconnect all wires leading to reverb amplifier. To do this, you must loosen cork mounted in upper shelf and pull brown and black reverb spring wires down through the upper shelf hole.
4. Remove screws attaching reverb amplifier to the cabinet shelf. Do not undo the nuts on either end of the chassis mounts. They do not fasten reverb amplifier to the bottom of the cabinet.
5. Slide reverb amplifier out of the cabinet.

REVERB AMPLIFIER REPLACEMENT (ALL MODELS)

1. After fastening reverb amplifier in place with its mounting screw(s), reconnect wires as follows:
   a. AC plug to AC reverb amplifier socket on the rotor amplifier.
   b. RED/BLACK reverb amp lead to its two-pin socket on rotor amplifier.
   c. Reverb speaker plug into its socket on the reverb amplifier.
   d. RED/BLACK dividing network plug into its socket on the reverb amplifier.
   e. BLACK SHIELDED reverb amp lead to reverb spring socket marked: "OUT".
   f. BROWN reverb amp lead to reverb spring socket marked: "IN".
2. Replace cork and all back covers. Replacement is now complete.

REVERB AMPLIFIER TUBES

See section on tubes under Rotor Amplifier, page 6 of this manual.

REVERB AMPLIFIER ELECTROLYTIC CAPACITOR

The reverb amplifier's electrolytic capacitor is of the finest quality and should last several years. Speaker hum or blown fuses may indicate need for a replacement. Replacement capacitors should be identical to the original capacitor, which is rated at 30-30-30-10 mfd, 475 VDC.

ELECTROLYTIC CAPACITOR REMOVAL

1. Sketch the capacitor's underside, showing which color lead or resistor goes to which location. This practice greatly simplifies correct wiring of replacement capacitor.
2. Disconnect all leads and resistors from the capacitor.
3. Loosen screw on capacitor mounting clamp and remove the two phillips screws fastening the clamp to the reverb amplifier chassis.
4. Remove capacitor from chassis.

ELECTROLYTIC CAPACITOR REPLACEMENT

1. Reverse capacitor removal procedure, using sketch to facilitate correct wiring of replacement capacitor.

REVERB AMPLIFIER FUSES

Both 117 volt and 234 volt/250 volt versions of reverb amplifier use a ¾ amp., "Slo-Blo" fuse to protect against short circuits. When a fuse fails, find the cause and eliminate it **before** replacing the fuse. Replacement fuses rated higher than ¾ amp. should never be used.

REVERB AMPLIFIER DISTORTION

Reverb amplifier distortion is usually caused by setting the reverb amplifier volume control too high. (See page 3 for proper reverb amplifier control adjustment.) Extra gain has been designed into the LESLIE Reverb Amplifier to compensate for possible low console output. Use this extra gain carefully, as the maximum volume control setting usually causes distortion whenever the organ expression pedal is fully open.

REVERB AMPLIFIER TRANSFORMERS

REVERB AMPLIFIER TRANSFORMER REMOVAL

1. Sketch the transformer's underside, showing lead colors and their corresponding terminals. This aids greatly when connecting the new transformer. If wires are discolored beyond recognition due to environmental ageing, see page 17 or 18 for rewiring reverb amplifier power and output transformer.
2. Disconnect transformer leads from their terminals on the reverb amplifier.
3. Remove transformer mounting screws. Then detach transformer from the amplifier chassis.

REVERB AMPLIFIER TRANSFORMER REPLACEMENT

1. Fasten replacement transformer in place, using mounting nuts provided with it.
2. Measure, clip, and solder new transformer leads to correct locations in reverb amplifier.

NOTE: Leads supplying plate voltage to the tubes should not be too long.

NOTE: (Reverb Amplifier Output Transformer only) Incorrect wiring of a replacement output transformer results in improper phasing which causes reverb amplifier oscillation. It is possible to connect leads correctly and still experience this oscillation. In this case, reverse leads from the secondary winding of the new transformer at their connection points on the speaker socket.

234 VOLT/250 VOLT REVERB AMPLIFIER POWER TRANSFORMER (147RV/247RV HIGH VOLTAGE MODELS ONLY)

A special high voltage power transformer is used in reverb amplifiers powered by the 234 volt or 250 volt AC outlet. The factory-wired voltage is indicated by a sticker on top of both rotor and reverb amplifiers. The voltage of these amplifiers **must** match the line voltage before the speaker may be used. A speaker wired for 250 volts will produce distortion when operated on 234 volt line current, while a speaker wired for 234 volts will overheat and suffer component damage when overpowered by 250 volt line current.

If the speaker's rotor amplifier voltage differs from the line voltage match these voltages as outlined on page 6. Then convert the reverb amplifier to the line voltage as follows:

234 VOLT TO 250 VOLT REVERB AMPLIFIER POWER TRANSFORMER CONVERSION:

1. Remove BROWN wire from the one-lug terminal strip (See Fig. 5A.)
2. Remove WHITE wire from circuit board mounted upright to underside of chassis. (See Fig. 5B.)
3. Solder BROWN wire to circuit board. (See Fig. 5B).
4. Solder WHITE wire to the one-lug terminal strip. (See Fig. 5A). Conversion for 250 volts use is now complete.

250 VOLT TO 234 VOLT REVERB AMPLIFIER POWER TRANSFORMER CONVERSION

1. Remove WHITE wire from the one-lug terminal strip. (See Fig. 5A.)
2. Remove BROWN wire from circuit board mounted upright to underside of chassis. (See Fig. 5B.)
3. Solder WHITE wire to circuit board. (See Fig. 5B.)
4. Solder BROWN wire to the one-lug terminal strip. (See Fig. 5A).
   Conversion for 234 volt use is now complete.

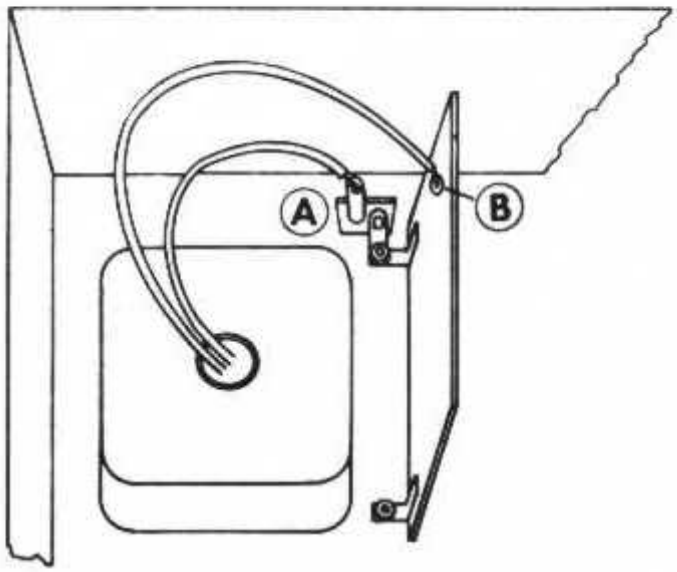

FIG. 5

MECHANICAL SERVICING

50/60 Hz CONVERSIONS

See Parts List and Parts Identification Chart, pages 15 and 16 of this manual.

DRIVE BELTS
LOWER ROTOR BELT:

145/147/147RV LOWER ROTOR BELT ADJUSTMENT

1. Loosen motor-mount wingnut nearest the rear of the cabinet.
2. Push the motor assembly to the left until the belt is taut; then gently release motor. (Don't allow motor to snap back. This causes incorrect belt adjustment.)
3. Tighten wingnut.
4. Test rotor operation by switching the console connector control from tremolo to chorale positions. Observe time required for the rotor to reach slow speed. Normally the lower rotor slows to chorale speed in approximately five to eight seconds. Excessively fast or slow speed changes can be corrected by adjusting belt tension as previously outlined.

247/247RV LOWER ROTOR BELT ADJUSTMENT

1. Loosen motor mount wingnut located nearest **front** of speaker. (The motor mount wingnut located nearest speaker's rear acts as the motor's pivot point.)
2. Pull motor assembly towards rear of speaker until belt is taut; then gently release. (Don't allow motor to snap back. This results in incorrect belt adjustment.)
3. Tighten wingnut.
4. Test rotor operation by switching console connector control from "Tremolo" to "Chorale," observing the time required for the rotor to reach slow speed. Normally the lower rotor slows to Chorale speed in about five to eight seconds. Excessively fast or slow speed changes can be corrected by adjusting belt tension as previously outlined.

LOWER ROTOR BELT REMOVAL (All Models)

1. Unplug the bass speaker at the dividing network. Remove the eight screws surrounding the rim of the speaker; then lift speaker up and out of the cabinet.
   CAUTION: NEVER lift a speaker by its cone! You're certain to puncture the cone and thus seriously damage the speaker.
2. Pull the exposed rotor support from the shaft. Remove the old belt.

LOWER ROTOR BELT REPLACEMENT (All Models)

1. Prestretch new belt before installing.
2. Place the new belt on the large pulley and pass the rest of the belt between rotor and shelf to the motor.
3. Fit the belt onto the motor pulley.
4. Replace bearing support bracket on the rotor shaft. Position ends of support bracket in the shallow channels in the shelf next to the speaker opening.
5. Align the holes in the support bracket with the speaker-mount holes in the shelf.
6. Replace the bass speaker, and partially insert the two mounting screws which also fasten the rotor support in place. Then partially insert the other six mounting screws around the rim of the loudspeaker.
7. Tighten down all eight mounting screws.
8. Readjust belt tension according to lower belt adjustment instructions.

UPPER ROTOR BELT

IDLER PULLEY ADJUSTMENT:

The spring-mounted idler pulley provides the proper tension for the upper rotor belt. If the upper rotor belt becomes loose, bend the idler pulley spring to again provide proper belt tension.

UPPER ROTOR BELT REMOVAL

1. Slip old belt off the 3-step pulley and the idler pulley.
2. Lift old belt over both horns of the treble rotor and remove belt from cabinet.

UPPER ROTOR BELT REPLACEMENT

1. Pass the new belt over one treble horn; then the other. Fit new belt into groove surrounding the base of the treble rotor.
2. Fit the new belt into the idler pulley groove.
3. Fit the new belt into center groove of the 3-step pulley for normal tremolo rotor speed. Lower groove provides higher speed; upper grove provides lower speed.

TWO-SPEED MOTOR ASSEMBLY

Both bass rotor and treble rotor motor assemblies use one large motor to drive the bass or treble rotor at the fast tremolo speed and one small motor to slow rotor to chorale speed.

The small motor is activated by switching the console connector control to CHORALE position. The magnetism generated in the laminations of the small motor "pulls" the small motor shaft into contact with a large drive wheel mounted on the large motor shaft. This should slow the bass rotor to chorale speed in approximately five to eight seconds. If speed change is excessively slow or fast, follow bass rotor belt adjustment outlined on page 9 of this manual. It is also possible to have a perfectly adjusted belt, but no chorale speed. In this case, check the contact pressure between the engaged small motor shaft and the rubber tired wheel on the large motor. Small motor shaft adjustment is covered on page 12 of this manual.

TWO-SPEED MOTOR REMOVAL:
(All Motor Assemblies Except 247/247RV Treble Rotor Motor Assembly)

1. Remove the lower or upper back panel of the 247 model or the upper panel of the 147 model, depending on specific motor assembly to be serviced.
2. Disconnect motor assembly's BROWN and WHITE power plugs from their sockets on the rotor amplifier.
3. (UPPER two-speed motor only): Release the upper rotor drive belt from the spring loaded idler pulley. Slip upper rotor drive belt off the three step pulley located on the large motor.
   (LOWER two speed motor only): Slip lower rotor drive belt off the large motor's drive pulley.
4. Remove wing nuts fastening motor assembly to cabinet. Removal is now complete.

247/247RV TREBLE ROTOR MOTOR ASSEMBLY REMOVAL

1. Disconnect GREEN/BLACK speaker wire extending from the treble speaker to its four-pin socket on the divider network.
2. Disconnect rotor amplifier wires and undo the two mounting screws located at either end of the amplifier chassis. Remove rotor amplifier from the cabinet.
3. Using a short shank screwdriver, loosen the three screws fastening the treble speaker mounting shelf to the cabinet. Do not remove motor mounting screws completely.
4. Raise the two long-shank screws on left hand side of the shelf sufficiently to allow speaker mounting shelf to clear cabinet.
5. Slide entire treble speaker mounting shelf out of cabinet.
6. Remove the three mounting screws holding the motor assembly to the shelf supporting the treble horn. Detach motor assembly.

TWO-SPEED MOTOR ASSEMBLY REPLACEMENT: (All Models)

Reverse removal procedure for the motor assembly being serviced.

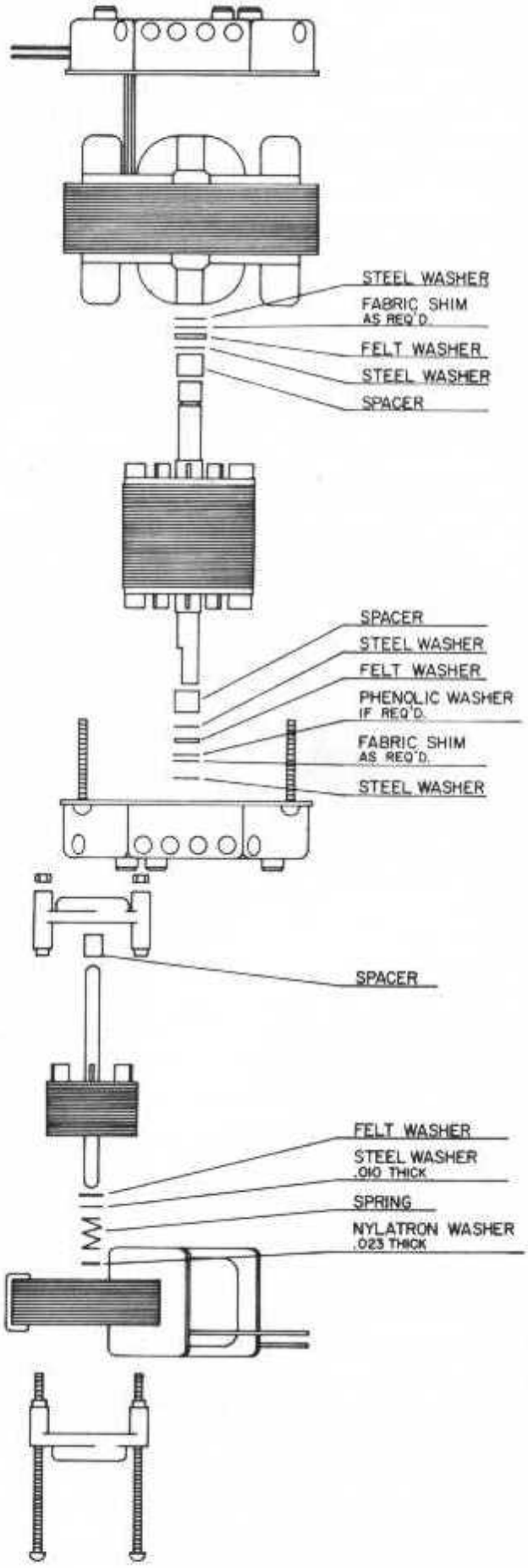

FIGURE 6

DISASSEMBLY OF MOTORS FOR CLEANING AND LUBRICATION

IMPORTANT: It is not necessary to completely disassemble the motors for proper cleaning. A thorough cleaning job can be done with compressed air or a vacuum hose after the motor has has been disassembled in accordance with the following instructions.

If the motors must be completely torn down, be sure to remove the burrs and deep scratches made by the set screw on one end of the large motor shaft and removal of the set ring on the other end. Smooth the shaft with crocus cloth or light filing **before** removing the large motor's end bells. This will prevent bearing damage.

SMALL MOTOR DISASSEMBLY
(All Motor Assemblies Except 247/247RV Treble rotor motor assembles).

1. After removing two-speed motor assembly as previously outlined, detach small motor from large motor by unscrewing the four mounting bracket screws. (See Fig. 6).
2. Remove the two nuts and washers holding small motor to its mounting plate. (See Fig. 6).
3. Remove lower adjustment nut from adjustment screw. (See Fig. 7, INCREASE CONTACT ADJUSTMENT).
4. Remove small motor mounting bracket. Small motor is now ready for cleaning and lubrication.

SMALL MOTOR DISASSEMBLY

(247/247RV treble rotor motor assemblies only)

1. Remove the two end nuts, lockwashers, and washers holding the small motor to its mounting bracket. (See Fig. 6).
2. Remove adjustment nut found beneath small motor laminations. (See Fig. 7). The small motor may now be detached from the mounting bracket. Note placement of the four spacer washers on the small motor mounting screws. Proper spacing is important to efficient small motor operation.

LARGE MOTOR DISASSEMBLY FOR CLEANING/LUBRICATION

(All motor assemblies except 247/247RV treble rotor motor assemblies.)

1. Remove rubber wheel with 3/32 allen wrench. (See Fig. 6).
2. Remove belt drive pulley at opposite end of shaft. (See Fig. 6).
3. Remove pulley support ring. (See Fig. 6).
4. IMPORTANT: Mark "U" Bracket and corresponding point on the large motor's end bell before performing step five. These marks will facilitate correct reassembly.
5. Remove three screws holding "U" Bracket in place. Remove "U" Bracket. Large motor is now ready for cleaning and lubrication.

LARGE MOTOR DISASSEMBLY
(247/247RV treble rotor motor assemblies only)

1. Remove rubber tired wheel from the large motor shaft with a 3/32 Allen wrench.
2. Mark end bell of large motor and its corresponding point on mounting bracket.
3. Remove three screws holding large motor to the mounting bracket. The large motor may now be detached from the mounting bracket. Large motor is ready for cleaning and lubrication.

CLEANING AND LUBRICATION OF LARGE AND SMALL MOTORS

(All Models)

1. After disassembling motors as previously outlined, remove dust and dirt from end bells of large motor with compressed air or a vacuum hose. If necessary, clean small motor in the same manner.
2. Clean all accessible parts with solvent. Allow motors to dry.
3. Apply enough LESLIE oil or other good light machine oil to soak bearing felts of each motor. (See "Oil Hole" and "Oil Felt" points on Fig. 7). Don't add more oil than felts will readily absorb. Cleaning and lubrication of small and large motors is now complete.

REASSEMBLY OF LARGE AND SMALL MOTORS (All Models)

1. Reverse disassembly procedures for each motor, observing the following precautions:
   a. When installing the drive pulley on the shaft of the large motor, push it on as far as it will go; then back it off 1/16th inch.
   b. Be sure to line up drive pulley's set screw with FLAT part of the large motor shaft; **then** tighten it in place.
   c. (247/247RV treble rotor large motor only) Make certain the rim drive pulley on the bottom end of large motor shaft is smooth. Twist the "O" ring until its outer edge is smooth if rough spots exist.
2. After reassembly is completed, clean all moving parts thoroughly with alcohol. Then reinstall motor assembly in cabinet, reversing the removal procedure previously given.
3. Before adjusting the belt (see Bass or Treble Rotor Belt Adjustment instructions), adjust small motor shaft as follows:

SMALL MOTOR SHAFT ADJUSTMENT:

(All small motors).

Correct contact pressure between the small motor shaft and the rubber tired wheel of the large motor is achieved as follows:

1. Turn power to small motor ON by switching console connector control to "Chorale" position.
2. Adjust the contact adjustment nuts on either side of the small motor lamination until the shaft no longer touches rubber tired wheel. (See Fig. 7, CONTACT ADJUSTMENT INCREASE/CONTACT ADJUSTMENT DECREASE).
3. Hold rotor drum or treble horn to prevent it from rotating.
4. Slowly tighten the adjustment nut (See Fig. 7, CONTACT ADJUSTMENT INCREASE) to force small motor shaft against rubber tired wheel. Continue turning this nut until drive pulley of large motor begins to turn under the belt. Don't over-tighten nut. If shaft adjustment is too tight, it won't disengage from the rubber tired wheel when the faster tremolo speed is desired.

NOTE:

Make certain the outer edge of the rim drive pulley is smooth. Uneven spots where the neoprene "O" ring of the rim drive pulley presses against the engaged shaft of the small motor could stall the motor and definitely reduces its operating efficiency. If uneveness exists, twist the "O" ring until its outer edge is smooth.

5. Tighten the other adjustment nut. Small motor shaft adjustment is now complete.

MOTOR NOISES

Excessive motor noise may mean bearings are slightly misaligned. Light tapping on one or more sides of the motor laminations should align the bearings and reduce motor noise.

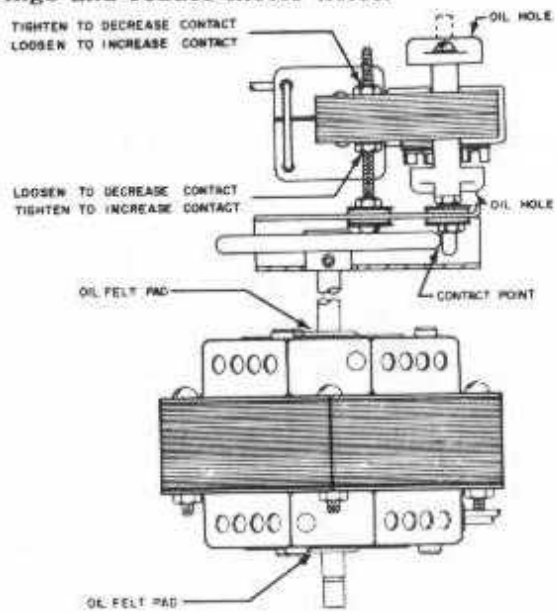

FIG. 7

LOUDSPEAKER SYSTEM
AND DIVIDING NETWORK

The Leslie Speaker uses a two-way system with two separate loudspeakers. Pedal and midrange tones are generated by a heavy-duty 15-inch speaker with permanent magnet and 16 ohms impedance. Upper, middle, and highest tones are generated by a compression-type driver unit, also with a permanent magnet and 16 ohms impedance.

The 15-inch speaker is mounted in a matched bass reflex enclosure. Therefore, it is important that the cabinet back be in place and securely fastened. The high frequency driver is loaded by means of a rotary horn. Only one of the horns in the upper rotor actually radiates sound. The other horn provides dynamic balance to prevent vibration. A small cotton acoustic filter is placed in the throat of the horn. This filter should not be removed.

The two loudspeakers are connected to the amplifier by means of a two half-section M-derived frequency dividing (crossover) network. This network separates the amplifier output into treble and bass ranges, permitting the correct type signal to be channelled to each of the two loudspeakers. The crossover occurs at 800 Hz. The dividing network is built of durable, stable components and rarely requires servicing.

SPEAKER PROBLEMS

Because of the extremely strong permanent magnetic fields in the loudspeakers, it is inadvisable to attempt cone replacements or any other repairs involving disassembly of the speakers. Speaker repair or replacement should be arranged through your LESLIE speaker dealer.

Should the treble speaker become inoperative for some reason, emergency operation of the cabinet can be arranged. Unplug the bass speaker from the dividing network and plug it directly into the amplifier output socket. There will, of course, be a loss of musical quality until the complete system is restored.

Suspected low output from the dividing network can also be checked with the above procedure: that is, by temporarily by-passing the dividing network and plugging the speaker directly into the amplifier.

CAUTION:

When lifting a speaker by its edges, be careful not to allow your fingers to slip onto the speaker cone. This could puncture the cone and cause severe speaker damage.

TREBLE SPEAKER REMOVAL AND REPLACEMENT

1. Remove the upper back cover and the rotor belt. (Remove lower back cover on 247/247RV models.)
2. Remove the center compartment back cover. (Not necessary on 247/247RV models).
3. Remove the treble speaker plug from the dividing network.
4. Remove the three screws in the rim of the treble speaker unit, and drop the speaker unit straight down and out of the cabinet. The upper tremulant rotor may be removed, if desired, by turning it sideways.

IMPORTANT:

When replacing these parts, be sure the rubber and metal thrust washers are on the spindle so that the tremulant rotor will operate at the correct height and bass tones will not produce thrust bearing noises. The rubber washer is first placed on the spindle. Then the metal washer is placed on the rubber washer.

BASS SPEAKER REMOVAL AND REPLACEMENT

Remove the eight mounting screws around the rim of the speaker. Unplug the speaker from the dividing network. Finally, remove the speaker, lifting it straight up; then out of the cabinet.

Replace the speaker by lowering it straight down over the large opening in the shelf. Place eight screws in the mounting holes, then tighten them securely. Finally, reconnect the speaker, inserting speaker into the proper socket in the dividing network.

REVERB SPEAKER REMOVAL AND REPLACEMENT: (147RV/ 247RV MODELS ONLY)

147RV: REVERB SPEAKER REMOVAL

1. Remove middle back cover from cabinet.
2. Disconnect reverb speaker leads from reverb amplifier socket.
3. Locate speaker enclosure box on right hand side of cabinet. Unscrew wingnut, remove bracket and speaker enclosure box to expose the 6x9 reverb speaker.
4. Remove four mounting screws from reverb speaker, using a phillips screwdriver. Remove reverb speaker from cabinet.

247RV: REVERB SPEAKER REMOVAL

1. Remove upper back cover from cabinet.
2. Disconnect reverb speaker leads from reverb amplifier socket.
3. After locating speaker enclosure on front of cabinet, remove mounting screws from back of the enclosure to expose two 6x9 reverb speakers.
4. Unscrew the four mounting screws from each reverb speaker with a phillips screwdriver. Remove reverb speakers from cabinet.

REVERB SPEAKER REPLACEMENT 147RV/247RV

Reverse removal procedure outlined above. Replacement speakers should duplicate original speakers in size, impedance, and efficiency. (See specifications, page 2 of this manual). Replacement speakers are available through your LESLIE speaker dealer. Specify number 047225.

HORN REFLECTOR REPLACEMENT

On a damaged reflector, cut the stand-off pins so they can be pulled out with a pair of slip joint or "gas" pliers.

In assembling the new reflector, make sure it is put on so the cut edge will be at the top of the horn when it is in operating position. Use 3M weatherstrip cement to fasten reflector securely.

TREBLE ROTOR REMOVAL AND REPLACEMENT

See page 15 or 16 for exploded view of treble rotor assembly.)

1. Remove the upper back cover and the rotor belt.
2. Remove the center compartment back cover.
3. Remove the treble speaker unit plug from the dividing network.
4. Remove the three screws in the rim of the treble speaker unit, and drop the speaker straight down and out of the cabinet. The tremulant rotor may now be removed by turning it sideways.

IMPORTANT:

When replacing these parts, be sure the rubber and metal thrust washers are on the spindle, so that the tremulant rotor will operate at the correct height, and bass tones will not produce thrust bearing noises. The rubber washer is first placed on the spindle; then the metal washer is placed over the rubber washer.

BASS ROTOR, UPPER BEARING REPLACEMENT

(See page 15 or 16 for exploded view of bass rotor assembly.)

1. Remove bass speaker.
2. Remove top half of bearing clamp. The ball bearing can now be lifted out and replaced.

If a newly installed bearing seems slightly loose, remove the bearing support assembly from the cabinet. Disassemble and bend the lower half of the bearing clamp so it will apply more pressure to the ball bearing.

BASS ROTOR, LOWER BEARING REPLACEMENT

(See page 15 or 16 for exploded view of bass rotor assembly.)

1. Lay cabinet on floor so that bottom is accessible.
2. Remove the two screws that fasten the bearing mounting plate to the cabinet, and remove lower bearing assembly from the shaft. Be sure to save the flat metal washer between the rotor and lower bearing grommets. It is important that this washer be in place when bearing is reassembled.
3. Remove the top half of bearing clamp to replace the ball bearing assembly.
4. When re-inserting rotor shaft into the bearing holder, make certain the flat washer is placed between the rotor and bearing grommets.

BASS TREMULANT ROTOR REMOVAL AND REPLACEMENT

(See page 15 or 16 for exploded view of bass rotor assembly.)

1. Remove bass speaker.
2. Remove upper bearing support and belt.
3. Using the large pulley as a handle, remove the tremulant rotor shaft by twisting and pulling up at the same time. The tremulant rotor can then be removed. Be sure to save the metal flat washer found between the bearing and rotor grommets.
4. Replace the tremulant rotor with the concave surface of the deflector facing upwards. (The brace for the deflector will be underneath). Make certain the flat metal washer is in place between the bearing and bottom rotor grommets. When replacing the rotor shaft on the rotor, a little oil or Vaseline may be used as a lubricant. The Neoprene grommets will not be damaged by such lubricants.

When inserting the shaft and pulley assembly be sure that the two drive pins located on the pulley straddel the rotor spoke which is supported by the curved sound deflector.

When inserting the shaft, hold the rotor in a position that will allow the lower shaft end to enter the bearing grommet without displacing the flat metal washer between the bearing and rotor grommets.

To simplify the alignment of the shaft with the lower bearing, it may be easier to place the cabinet on the floor and remove the lower bearing assembly as in replacing the lower bearing. Also, in this way, it can be determined that the washer (between the bearing and rotor grommets) is properly in place.

DIVIDING NETWORK

DIVIDING NETWORK REMOVAL

1. Remove: MIDDLE back cover of 145/147/147-RV.
   LOWER back cover of 247RV.
   LOWER and UPPER back covers of older model 247 speakers.
   LOWER back cover only of newer model 247 speakers.
2. **145/147/247:** Disconnect RED/BLACK dividing network leads from its socket on the rotor amplifier. On older 247 models, you must loosen cork mounted in hole in the upper shelf to extract excess RED/BLACK lead stored in the upper cabinet.
3. **147RV/247RV:** Disconnect RED/BLACK dividing network lead from its socket on the reverb amplifier.
4. Remove the two screws or wingnuts holding dividing network to cabinet shelf on every model except 247RV. The 247RV's dividing network is fastened to the front of the lower cabinet.
5. Remove the dividing network from the cabinet.

DIVIDING NETWORK REPLACEMENT

Reverse dividing network removal procedure previously outlined.

PARTS LIST: 145/147/147RV SPEAKERS

010728	Bracket, Motor Mounting
010744	Locking Lever
010751	Bumper, Neoprene
011700	Belt, Drive, Lower, 60 Hz
012526	Motor, A5, 117V 60Hz
012849	Screw, 10-24 x 1¼"
012930	Nut, Hex, 6-32 x 5/16" x 7/64"
013029	Slinger, Oil
014019	Motor, D10, 2 Shaft, 117V 50/60Hz
014027	Pulley Assembly, Rim Drive
014050	Bushing
014068	Bracket, Small Motor Mounting
014084	Grommet
014159	Ring, "O" 2.475" ID
014266	Bracket, "U"
014795	Motor, A5, 117V 60Hz
014845	Motor, A5, 117V 50Hz
014852	Motor, A5, 117V 50Hz
014928	Pulley, Motor, 50Hz
016816	Bearing Assembly, Treble Speaker
016832	Screw, 6-32 x 1⅛"
017012	Bracket, "U"
017525	Shield, Slow Motor Mount
018309	Pulley, Motor 60Hz
018713	Cover, Rotor, Large- Cloth
019224	Screw, 6-32 x ⅝"
020305	Speaker, Treble Drive, 16 Ohm
020313	Ring, Spacer, Treble Driver
021048	Belt, Drive, 50/60Hz, Graphited
024661	Tubing, Neoprene 1/16" x 2¾"
025452	Screw, 8-32 x ⅝"
025460	Screw, 10-24 x ⅜"
025510	Screw, 10-24 x 2¾"
025544	Screw, 10-32 x ½"
025650	Screw, No. 10 x ⅞"
025973	Screw, 10-32 x 3/16"
025981	Washer, No. 6 x 9/16" x 3/64"
026138	Screw, 8-32 x 13/16"
026294	Screw, 8-32 x ¼"
026344	Screw, 10-24 x 1½"
026518	Washer, No. 10 x ¾" x 3/64"
026641	Washer, No. 8 x 31/32" x 1/16"
026666	Screw, No. 6 x ¼"
026674	Screw, 6-32 x 2¼"
026690	Washer, No. 10 x ½" x 1/16"
026708	Screw, 10-24 x 1¾" w/Int. Lockwasher
026740	Screw, 8-32 x ⅜"
026765	Washer, Lock, No. 8 x 5/16" x .012"
026773	Nut, Hex 8-32 x 11/32" x ⅛"
027953	Nut, Hex 10-32 x ⅜" x ⅛"
028019	Washer, Lock No. 10 x ⅜" x .022"
028076	Nut, Wire
028993	Washer, Lock No. 6 x 9/32" x .018"
029785	Cable Assembly, 117V, 29" long—brown
029918	Cable Assembly, 117V, 29" long—white
029983	Cable Assembly, 117V, 9" long—brown
029991	Cable Assembly, 117V, 9" long—white
030601	Belt, Drive, Lower, 50Hz
031062	Speaker, 6" x 9", 16 Ohm
032292	Rotor, Wood 17" x 9"
037564	Motor Assembly, 2 Speed, 117V 60Hz
044685	Motor Assembly, 2 Speed, 117V 60 Hz Shielded
045468	Belt, Drive, Upper, 50/60Hz
045872	Motor Assembly, 2 Speed 117V 50Hz
045880	Motor Assembly, 2 Speed 117V 50 Hz Shielded
045898	Motor Assembly, 2 Speed 117V 50Hz
048991	Bushing, Shoulder, #10
050161	Filter, Acoustic — Treble Horn
050211	Grommet
050229	Spindle and Plate Assembly
050252	Washer, .876" x 1⅜" x .012/.010"
050260	Washer, 1-1/16" x 1½" x ⅛"
050286	Washer, ⅝" x 1½" x ⅛"
050294	Bushing
050500	Pulley, 3 Step, 60Hz
050559	Pulley, 3 Step, 50Hz
050625	Nut, Wing, 10-24
050633	Bushing, Shoulder
050641	Grommet
050658	"Z" Bracket, Motor Mounting
050666	"C" Ring
050708	Idler Assembly
050716	Pulley and Bearing Assembly, Idler
050732	Idler Spring
050740	Bushing
050757	Pad, Neoprene 1" x 4" x ⅛"
050807	Treble Horn Assembly
050815	Treble Horn
050823	Reflector, Treble Horn Assembly
050906	Spindle Assembly, Treble Horn
051003	Support Assembly, Rotor, Upper
051029	Rotor Bearing Retainer, Upper
051037	Grommet
051045	Ball Bearing, Rotor
051052	Rotor Bearing Retainer, Lower
051060	Bushing
051078	Rotor Support, Upper
051102	Ball Bearing Assembly, Lower Rotor
051128	Plate, Bearing
051201	Plate, Belt Adjusting
051219	Screw and Wing Nut Assembly
051300	Rotor and Grommet Assembly
051326	Grommet
051342	Washer ⅜" x ⅞" x 5/64"
051706	Shaft and Pulley Assembly-Standard Cabinet
051730	Bushing, Rubber
052308	Speaker, 15", 16 ohm
052803	Crossover Assembly, 16 Ohm 800 Hz
052829	Ring, Spacer, Crossover Network
054007	Motor Assembly, 2 Speed 117V 60Hz
061507	Reverb Unit

Not Shown:

020685	Speaker Extension Cable (147RV only)
024968	3-Way Socket w/AC plug and cable (RV models only)

COMPONENT VARIATIONS: 145/147/147RV SPEAKERS

For:	117V, 60Hz	117V, 50Hz	234V, 50Hz	250V, 50Hz
Rotor Amplifier, 145/147	017749	053074	052985	052993
Rotor Amplifier, 147RV	050039	053264	052969	052977
Reverb Amplifier, 147RV	061440	061440	053272	053280
Motor Assy, Bass Rotor	044685	054445	054445	054445
Large Motor, Bass Motor Assy	014019	014019	014019	014019
Small Motor, Bass Motor Assy	014076	054452	054452	054452
Motor Assy, Treble Rotor	054007	045872	045872	045872
Large Motor, Treble Motor Assy	014019	014019	014019	014019
Small Motor, Treble Motor Assy	012526	014852	014852	014852
Belt, Bass Rotor	011700	030601	030601	030601
Belt, Treble Rotor	045468	045468	045468	045468
Pulley, Bass Motor Assy	018309	014928	014928	014928
Pulley, Treble Motor Assy	050500	050559	050559	050559

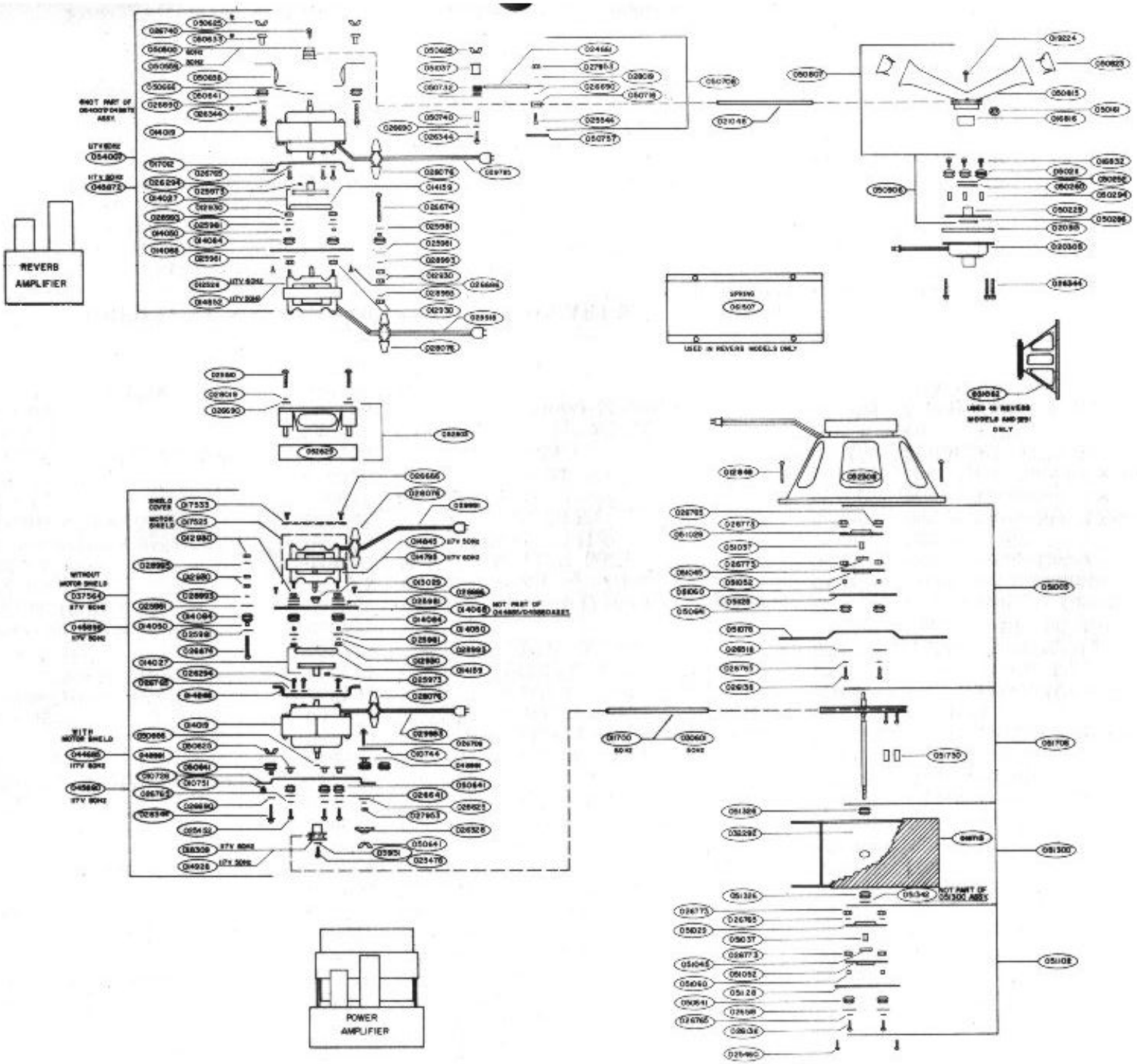

EXPLODED VIEW: 145/147/147RV SPEAKERS

PARTS LIST: 247/247RV SPEAKERS

011200	Belt, Drive, Lower, 60Hz
012526	Motor, A5, 117V 60 Hz
012849	Screw, Machine, 10-24 x 1¼″
012930	Nut, Hex, 6-32 x 5/16″ x 7/64″
013029	Slinger, Oil
013813	Sleeve, Slow Motor Shaft
013821	Pulley Assembly, Rim Drive
013839	Ring, "O"
014019	Motor, D10, 2 Shaft, 117V 50/60Hz
014027	Pulley Assembly, Rim Drive
014050	Bushing
014068	Mounting Bracket, Small Motor
014084	Grommet
014159	"O" Ring
014852	Motor, A5, 117V 50Hz
016816	Bearing Assembly, Treble Speaker
016832	Screw, 6-32 x 1⅛″
017012	U Bracket
019224	Screw, 6-32 x ⅝″
020305	Speaker, Treble Driver, 16 ohm
020313	Ring, Spacer — Treble Driver
024307	Pulley, Motor, 50Hz
024661	Tubing, Neoprene, 1/16″ x 2¾″
025510	Screw, Machine, 10-24 x 2¾″
025544	Screw, 10-32 x ½″
025973	Screw, 10-32 x 3/16″
025981	Washer, No. 6 x 9/16″ x 3/64″
026138	Screw, Machine, 8-32 x 13/16″
026294	Screw, 8-32 x ¼″
026344	Screw, 10-24 x 1½″
026518	Washer, Flat, No. 10 x ¾″ x 3/64″
026666	Screw, No. 6 x ¼″
026674	Screw, 6-32 x 2¼″
026690	Washer, No. 10 x ½″ x 1/16″
026674	Screw, 6-32 x 2¼″
026690	Washer, No. 10 x ½″ x 1/16″
026740	Screw, 8-32 x ⅜″
026765	Lock Washer, No. 8 x 5/16″
026773	Nut, Hex 10-32 x ⅜″ x ⅛″
026963	Screw, Machine, 10-24 x ⅞″
027953	Nut, Hex, 10-32 x ⅜″ x ⅛″
028019	Washer, No. 10 x ⅜″
028076	Nut, Wire
028100	Shaft & Pulley Assembly
028993	Lock Washer, No. 6 x 9/32″
029006	Screw, 10-24 x 1⅝″ w/Flat Washer, Blk. Oxide
029983	Cable Assembly, 117V 9″ Brown
029991	Cable Assembly, 117V, 9″ Long
031062	Speaker, 6" x 9", 16 Ohm
030601	Belt, Drive, Lower, 50 Hz
033415	Motor Assembly, 2 Speed, 117V 50Hz
033423	Motor Assembly, 2 Speed, 117V 50Hz
050161	Filter, Acoustic — Treble Horn
050211	Grommet, 9/32″ x 13/32″ x 5/16″
050229	Spindle and Plate Assembly
050252	Washer
050260	Washer, Nylon, 1-1/16″ x 1½″ x ⅛″
050286	Washer, Nylon, ⅝″ x 1½″ x ⅛″
050450	Motor, A5, 117V 50Hz
050500	Pulley, 3 Step, 60 Hz
050559	Pulley, 3 Step, 50 Hz
050617	Plug, 2 Pin, AC
050625	Nut, Wing, 10-24
050633	Bushing, Shoulder
050641	Grommet, 1″ x ¾″ x 5/16″
050658	"Z" Bracket, Motor Mounting
050666	"C" Ring
050708	Idler Assembly
050716	Idler Pulley and Bearing Assembly
050732	Spring, Idler
050740	Bushing
050757	Pad, Neoprene, 1″ x 4″ x ⅛″
050807	Horn Assembly, Treble
050815	Horn, Treble
050823	Reflector, Treble Horn Assembly
050906	Spindle Assembly, Treble Horn
051003	Upper Rotor Support Assembly
051029	Upper Rotor Bearing Retainer
051037	Grommet, 9/16″ x ⅜″ x 5/16″
051045	Rotor Ball Bearing
051052	Lower Rotor Bearing Retainer
051060	Bushing
051078	Upper Rotor Support
051128	Bearing Plate
051201	Belt Adjusting Plate
051219	Screw & Wing Nut Assembly
051326	Grommet
051342	Flat Washer, ⅜″ x ⅞″ x 5/64″
051607	Pulley, Motor, 60 Hz
051730	Rubber Bushing, ⅛″ x ⅜″ x ¾″
052308	Speaker, 15″, 16 Ohm
052829	Spacer Ring — Crossover Assembly
060236	Small Motor Mounting Bracket
060954	Cover, Small Rotor — Cloth
060970	Rotor, Wood
060996	Motor Assembly, 2-Speed, 117V 60 Hz
061002	Motor Assembly, 2-Speed, 117V 60Hz
061093	Belt, Drive 600mm x 3mm
061119	Motor, A5, 117V 60Hz
Not Shown:	
024968	3-Way Socket w/AC Plug and Cable (RV models only)

COMPONENT VARIATIONS: 247/247RV SPEAKERS

For:	117V, 60Hz	117V, 50Hz	234V, 50Hz	250V, 50Hz
Rotor Amplifier, 247	017749	053074	052985	052993
Rotor Amplifier, 247RV	050039	053264	052969	052977
Reverb Amplifier, 247RV	061440	061440	053272	053280
Motor Assy., Bass Rotor	061002	054973	054973	054973
Large Motor, Bass Motor Assy	014019	014019	014019	014019
Small Motor, Bass Motor Assy	012526	014852	014852	014852
Motor Assy, Treble Rotor	060996	054965	054965	054965
Large Motor, Treble Motor Assy	014019	014019	014019	014019
Small Motor, Treble Motor Assy	053165	054999	054999	054999
Belt, Bass Rotor	011700	030601	030601	030601
Belt, Treble Rotor	061093	061093	061093	061093
Pulley, Bass Motor Assy	050607	024307	024307	024307
Pulley, Treble Motor Assy	050500	050559	050559	050559

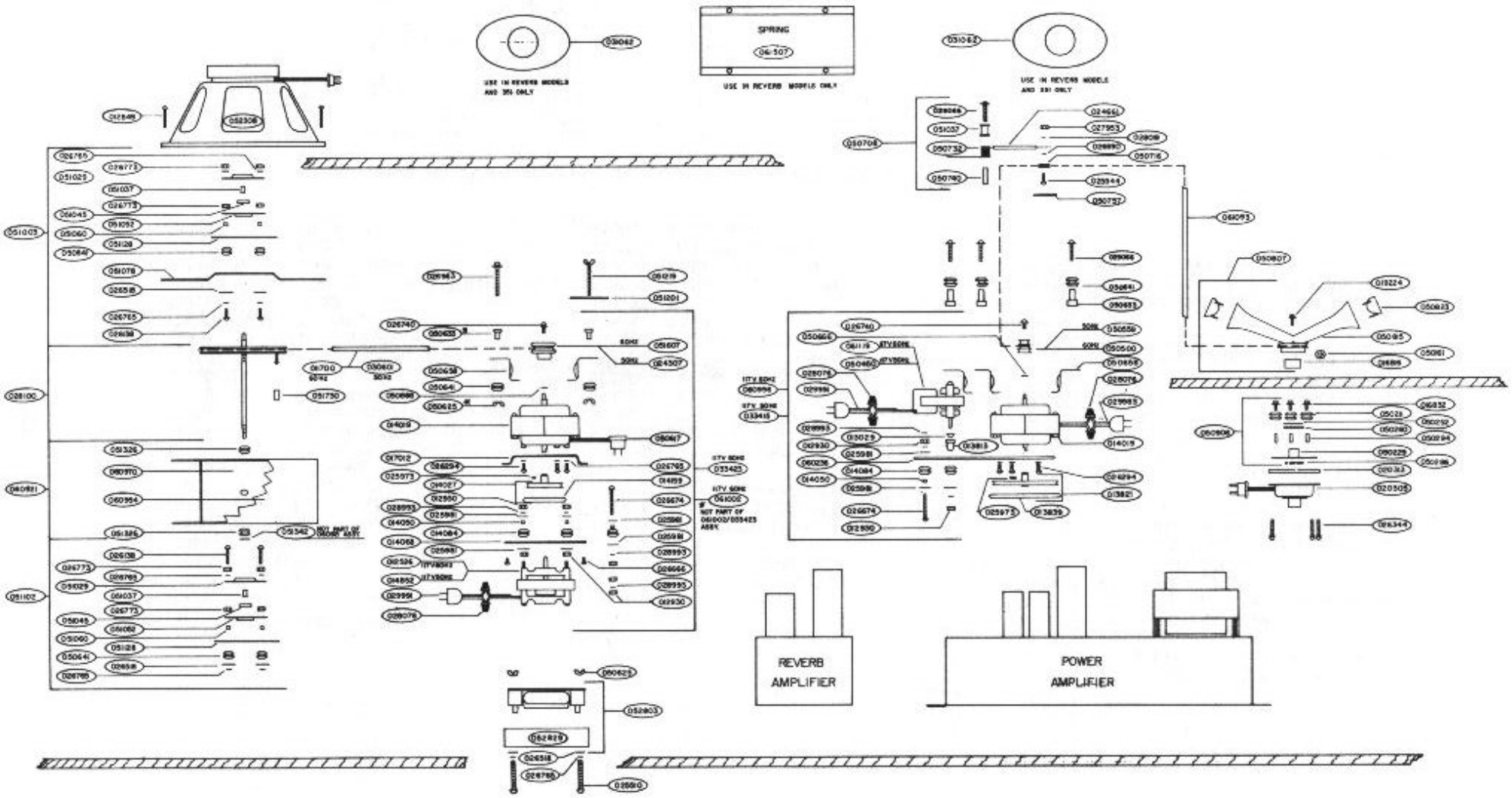

EXPLODED VIEW: 247/247RV SPEAKERS

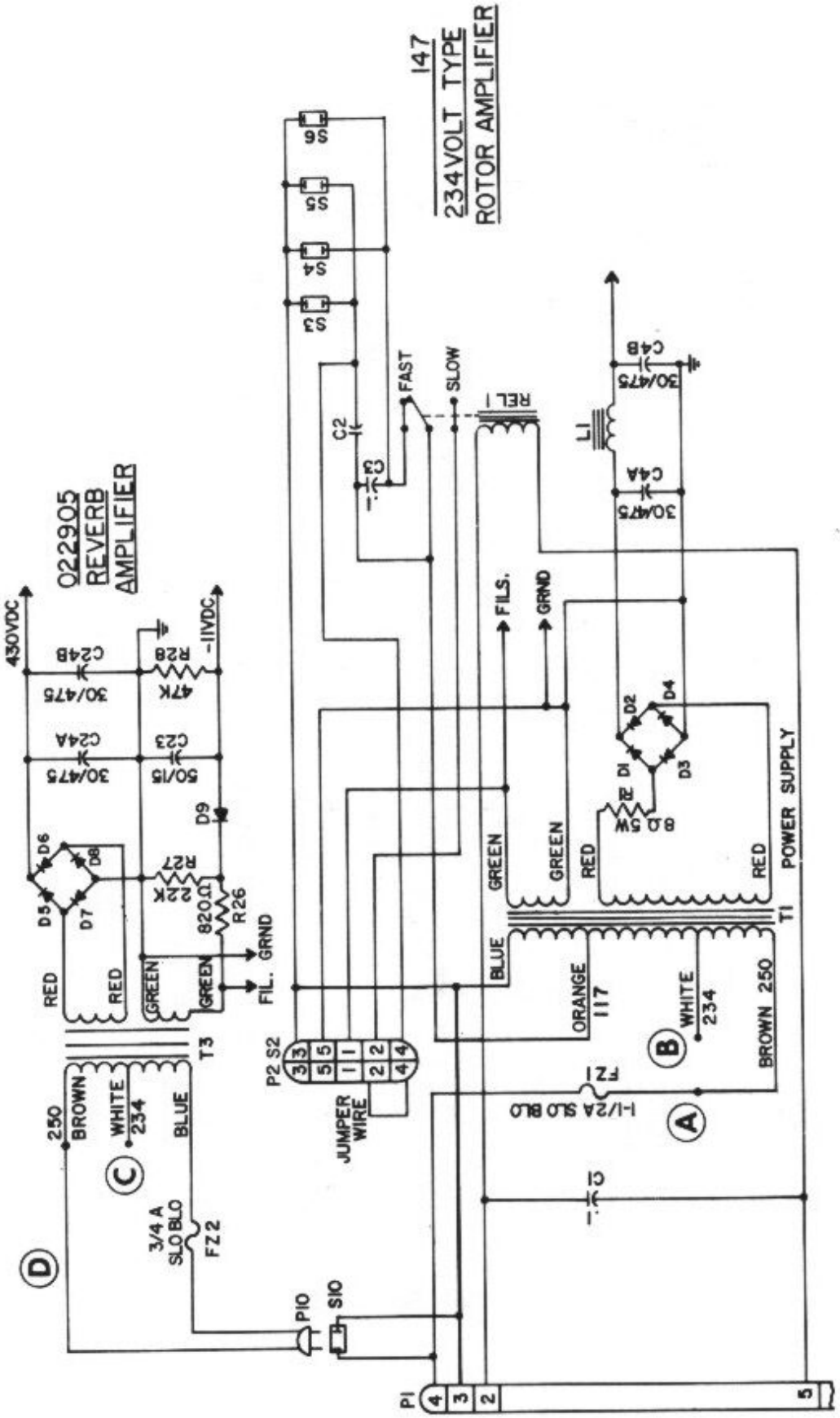
147
234VOLT TYPE
ROTOR AMPLIFIER
022905
REVERB
AMPLIFIER
430VDC
-11VDC
C24B
30/475
R28
47K
C24A
30/475
C23
50/15
D9
D6
D8
D5
D7
R27
22K
820Ω
R26
RED
RED
GREEN
GREEN
FIL. GRND
T3
250
BROWN
WHITE
234
BLUE
C
3/4 A
SLO BLO
FZ2
D
P10
S10
P2 S2
JUMPER
WIRE
S6
S5
S4
S3
C2
C3
FAST
SLOW
REL-1
FILS.
GRND
GREEN
GREEN
RED
RED
BLUE
ORANGE
117
WHITE
234
BROWN 250
B
A
FZ1
1-1/2A SLO BLO
C1
D2
D4
D1
D3
8Ω 5W
T1
POWER SUPPLY
L1
C4B
30/475
C4A
30/475
P1
4
3
2
5

PARTS LIST: 147 ROTOR AMPLIFIER — 234V, 50Hz (052969) 250V, 50Hz (052977)

147 UK ROTOR AMPLIFIER — 234/250V, 50Hz (064287)

Power Supply Board, Complete		055269
D1, 2, 3, 4	Rectifier, Silicon, 800 PIV, 1 Amp	055228
R1	Resistor, 8 Ohm, 5 Watt, 10% (wire wound)	021493
Rotor Amplifier Chassis		
C1, 2, 3	Capacitor, Mylar, .1 mfd, 600 V, 10%	027318
C4 A, B	Capacitor, Electrolytic, 30-30-30-10 mfd, 475VDC	029892
FZ1	Fuse, 1.5 Amp., 125 Volt "Slo-Blo"	021766
L1	Choke, Filter, Triad	055111
P1	Plug, 6 Pin, Amphenol	060442
P2	Plug Assy, 5 Pin - Jumper	017574
Rel 1	Relay, Single Pole, Double Throw, 115 V, 50/60 Hz	027649
*Rel 1	Relay, Single Pole, Double Throw, 250 V, 50/60 Hz	019299
S2	Socket, 5 Contact, Eby	029652
S3, 4, 5, 6	Socket, AC	055137
T1	Transformer, Power, 234/250 Volt, 50/60 Hz	011015

*250 V relay replaces 115 V relay in 147 UK Rotor Amplifier.

147 REVERB AMPLIFIER, 234/250 VOLT 50/60 Hz (022905)

Power Supply Board, complete		061465
C23	Capacitor, Electrolytic, 50 mfd, 15 VDC	028324
D5, 6, 7, 8	Rectifier, Silicon, 800 PIV, 1 Amp	055228
D9	Rectifier, Silicon, 100 PIV, 1 Amp	021154
R26	Resistor, 820 Ohm, ½ Watt, 10%	028373
R27	Resistor, 2.2K, ½ Watt, 10%	028571
R28	Resistor, 47K, ½ Watt, 10%	028506
Reverb Amplifier Chassis		
C24A, B, C, D	Capacitor, Electrolytic, 30-30-30-10 mfd, 475 VDC	029892
FZ2	Fuse, ¾ Amp, 250 Volt "Slo-Blo"	029884
P7RV	Plug, 2 Pin, Eby	029165
P10	Cable Assembly, 29" w/Plug	029785
P12, 13	Plug, Phono	029876
R40	Resistor, 12K, 1 Watt, 10%	028035
R41	Resistor, 470 Ohm, ½ Watt, 10%	028068
S7RV	Socket, 2 Contact	029298
S11	Socket, 2 Contact	029298
T3	Transformer, Power, 117 V, 60 Hz	016923
T4	Transformer, Output	025411

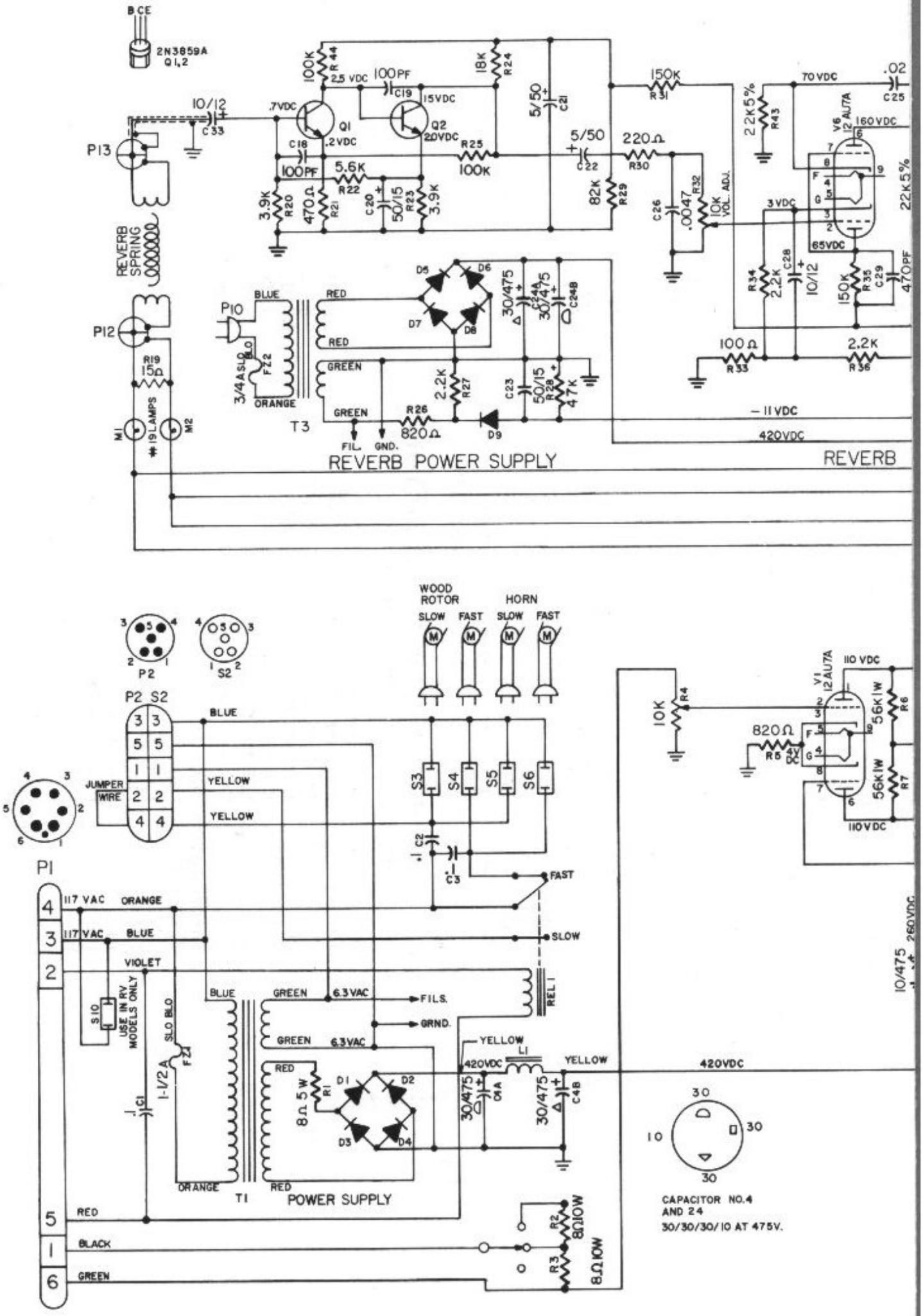
2N3859A
Q1,2
B C E
P13
REVERB SPRING
P12
R19 15Ω
#19 LAMPS
M1
M2
10/12
C33
.7VDC
Q1
.2VDC
C18
100PF
100K R44
2.5 VDC
100PF C19
15VDC
Q2
20VDC
18K R24
R25 100K
5.6K R22
3.9K R20
470Ω R21
C20 50/15
R23 3.9K
5/50 C21
5/50 C22
82K R29
150K R31
220Ω R30
C26 .0047
R32 10K VOL. ADJ.
70VDC
.02 C25
22K 5% R43
V6 12AU7A
160VDC
22K 5%
3VDC
65VDC
R34 2.2K
C28 10/12
R35 150K
C29 470PF
100Ω R33
2.2K R36
P10
BLUE
RED
RED
GREEN
GREEN
ORANGE
3/4A SLO BLO FZ2
T3
D5
D6
D7
D8
30/475 C24A
30/475 C24B
2.2K R27
C23 50/15
R28 4.7K
R26 820Ω
D9
FIL.
GND.
-11VDC
420VDC
REVERB POWER SUPPLY
REVERB
P2
S2
P2 S2
BLUE
YELLOW
YELLOW
JUMPER WIRE
WOOD ROTOR
HORN
SLOW
FAST
SLOW
FAST
S3
S4
S5
S6
C2
C3
FAST
SLOW
P1
117 VAC
ORANGE
117 VAC
BLUE
VIOLET
S10
USE IN RV MODELS ONLY
SLO BLO
F2 1-1/2A
C1
BLUE
GREEN
6.3VAC
FILS.
GRND.
GREEN
6.3VAC
RED
8Ω 5W R1
D1
D2
D3
D4
ORANGE
RED
T1
POWER SUPPLY
YELLOW
420VDC
L1
YELLOW
30/475 C4A
30/475 C4B
REL1
10/475
260VDC
10K R4
V1 12AU7A
110 VDC
820Ω R5
4V DC
56K 1W R6
56K 1W R7
110VDC
420VDC
RED
BLACK
GREEN
R2 10Ω 8W
R3 8Ω 10W
CAPACITOR NO.4 AND 24
30/30/30/10 AT 475V.

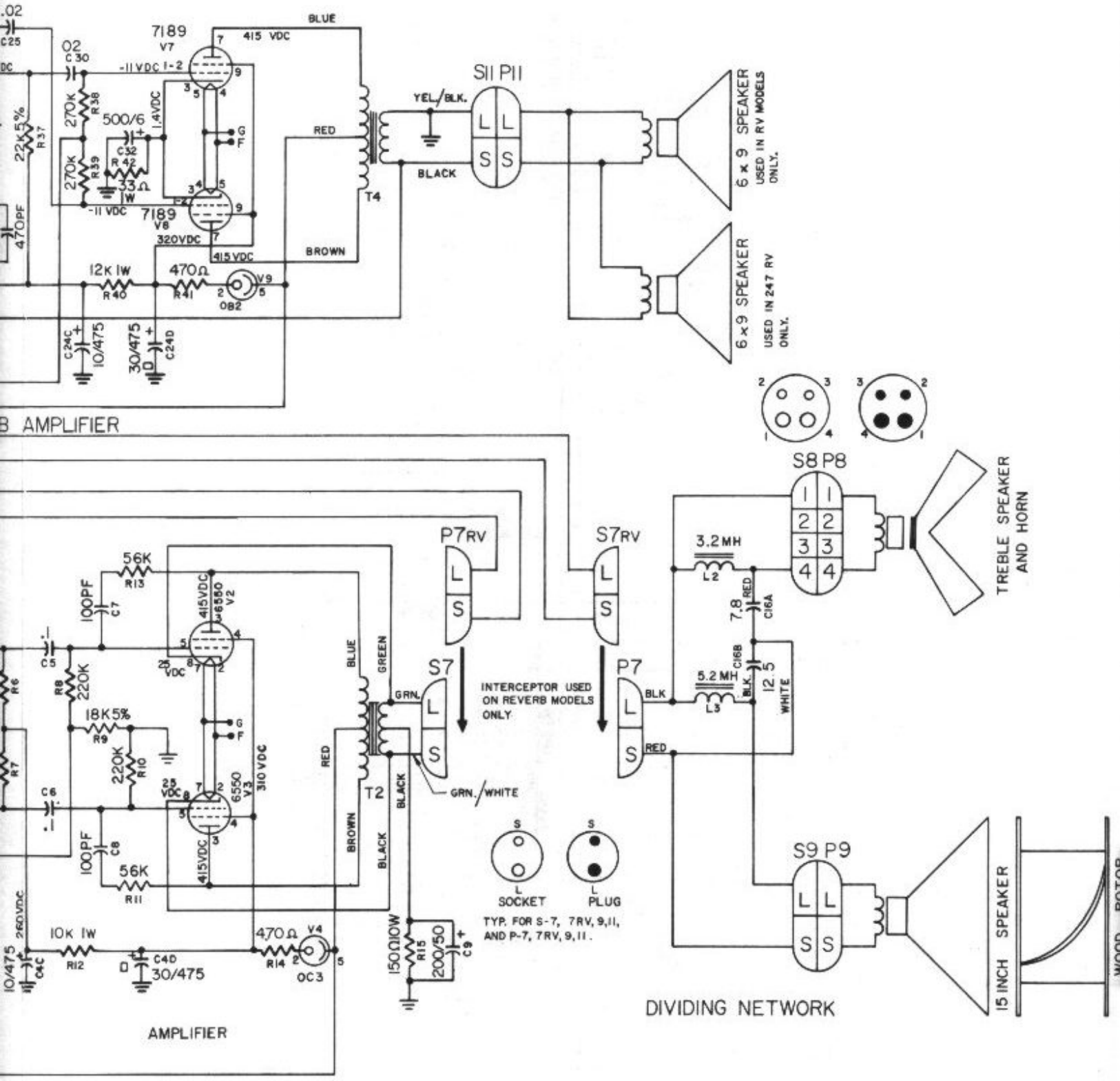
7189
V7
415 VDC
BLUE
-11 VDC 1-2
C30
270K
R38
500/6
C32
R42
33Ω
1W
1.4VDC
22K5%
R37
270K
R39
-11 VDC
7189
V8
320VDC
415VDC
RED
BROWN
T4
S11 P11
YEL./BLK.
BLACK
6 x 9 SPEAKER
USED IN RV MODELS ONLY.
6 x 9 SPEAKER
USED IN 247 RV ONLY.
12K 1W
R40
470Ω
R41
V9
OB2
C24C
10/475
30/475
C24D
AMPLIFIER
S8 P8
TREBLE SPEAKER AND HORN
P7RV
S7RV
3.2MH
L2
7.8
RED
C16A
56K
R13
100PF
C7
415VDC
6550
V2
C5
R8
220K
25 VDC
18K5%
R9
220K
R10
G
F
310 VDC
6550
V3
C6
100PF
C8
56K
R11
415VDC
BLUE
GREEN
GRN.
T2
RED
BROWN
BLACK
BLACK
S7
INTERCEPTOR USED ON REVERB MODELS ONLY
GRN./WHITE
P7
BLK
5.2MH
L3
C16B
BLK.
12.5
WHITE
RED
S
SOCKET
PLUG
TYP. FOR S-7, 7RV, 9,11, AND P-7, 7RV, 9,11.
S9 P9
15 INCH SPEAKER
WOOD ROTOR
10K 1W
R12
C4C
10/475
C4D
30/475
470Ω
R14
V4
OC3
150Ω10W
R15
200/50
C9
AMPLIFIER
DIVIDING NETWORK

ROTOR AMPLIFIER — 117 VOLT, 50Hz (053264)
117 VOLT, 60Hz (050039)

Power Supply Board, complete		055269
D1, 2, 3, 4	Rectifier, Silicon, 800 PIV, 1 amp.	055228
R1	Resistor, 8 ohm, 5 watt, 10%, wirewound	021493
Rotor Amplifier Chassis		
C1, 2, 3	Capacitor, Mylar, .1mfd., 600V, 10%	027318
C4A, B, C, D	Capacitor, Electrolytic, 30-30-30-10 mfd., 475VDC	029892
C5, 6	Capacitor, .1mfd, 600V, 10%	027318
C7, 8	Capacitor, Disc, 100pf, 1000V, 20%	028027
C9	Capacitor, Electrolytic, 200mfd., 50V	020081
FZ 1	Fuse, 1½ amp, 125V "Slo-Blo"	021766
P1	Plug, 6 pin, Amphenol	060442
P2	Plug Assy, 5 Pin — Jumper	017574
R2, 3	Resistor, Wire Wound, 8 ohm, 10W, 10%	010934
R4	Potentiometer, Audio Taper	028803
R5	Resistor, 820 ohms, ½watt, 10%	028373
R6, 7	Resistor, 56K, 1watt, 5%	020206
R8	Resistor, 220K, ½watt, 5%	020222
R9	Resistor, 18K, ½watt, 5%	028472
R10	Resistor, 220K, ½watt, 10%	013615
R11	Resistor, 56K, ½watt, 10%	024133
R12	Resistor, 10K, 1watt, 10%	020214
R13	Resistor, 56K, ½watt, 10%	024133
R14	Resistor, 470 ohms, ½watt, 10%	028068
R15	Resistor, 150 ohms, 10watts, 10% (wire wound)	020115
Rel 1	Relay, 115 Volt, 50/60 Hz Single Pole Double Throw	027649
S2	Socket, 5 contact — Eby	029652
S3, 4, 5, 6	Socket, AC	055137
S7	Socket, 2 contact	029298
S10	Socket, AC	055137
T1	Transformer, Power, 117Volt/60Hz.	011007
T1	Transformer, Power, 117Volt/50Hz.	016196
T2	Transformer, Output	055103
V1	Tube, 12AU7A	029033
V2, 3	Tube, 6550	022301
V4	Tube, OC3	022319
L1	Choke, Filter, Triad	055111
Not Shown	Switch, Rotary, Single Pole, Double Throw	033407
Not Shown	Retainer, Capacitor	060988
Not Shown	Knob, Bar - Black	020289
Not Shown	Socket, Elect. Capacitor	055210
Not Shown	Socket, 8 Contact-Octal (for tubes 6550; OC3)	020321
Not Shown	Socket, 9 Contact (for tube 12AU7A)	020339

DIVIDING NETWORK (052803)

C16	Capacitor, Paper, 12.5 mfd/7.8 mfd, 50 VDC, 5%	052852
L2	Inductor, 3.2 MH	052837
L3	Inductor, 5.2 MH	052845
P7	Plug, 2 Pin, Eby	029165
S8	Socket, 4 Contact	018929
S9	Socket, 2 Contact	052860
Not Shown	Spacer Ring	052829

REVERB AMPLIFIER (061440)

Rectifier Circuit Assembly, Complete		061465
C23	Capacitor, Elect., 50mf, 15VDC	028324
D5, 6, 7, 8	Rectifier, Silicon, 800PIV, 1A	055228
D9	Rectifier, Silicon, 100PIV, 1A	021154
R26	Resistor, 820Ω	028373
R27	Resistor, 2.2KΩ	028571
R28	Resistor, 47KΩ	028506
Preamplifier Circuit Assembly, Complete		060061
C18, 19	Capacitor, Disk, 100pf, 1000V, 20%	028027
C20	Capacitor, Elect., 50mf, 15V	028324
C21, 22	Capacitor, Elect., 5mf, 50V	028589
C33	Capacitor, Elect., 10mf, 12V	028415
M1, 2	Lamp, #19	061515
Q1, 2	Transistor 2N3859A, NPN	061366
R19	Resistor, 15Ω	018051
R20	Resistor, 3.9KΩ	028563
R21	Resistor, 470Ω	028068
R22	Resistor, 5.6KΩ	024844
R23	Resistor, 3.9KΩ	028563
R24	Resistor, 18KΩ	018028
R25	Resistor, 100KΩ	028498
R29	Resistor, 82KΩ	027102
R31	Resistor, 150KΩ, 1W, 10%	024117
R44	Resistor, 100KΩ	028498
Amplifier Circuit Assembly (Less tubes; C24; R40, R41)		022137
C24A, B, C, D	Capacitor, 30-30-30-10mf, 475V	029892
C25	Capacitor, Disk, .02mf, 500V, 10%	028423
C26	Capacitor, Disk, .0047mf, 100V, 10%	028431
C28	Capacitor, Elect., 10mf, 12VDC	028415
C29	Capacitor, Disk, 470pf, 1000V, 20%	028662
C30	Capacitor, Disk, .02mf, 500V, 10%	028423
C32	Capacitor, Elect., 500mf, 6V	028407
P7RV	Plug, 2 Pin—Eby	029165
P12, 13	Plug, Phono	029876
R30	Resistor, 220Ω	028381
R32	Potentiometer, 10KΩ, Audio Taper	021014
R33	Resistor, 100Ω	028399
R34	Resistor, 2.2KΩ	028571
R35	Resistor, 150KΩ	028357
R36	Resistor, 2.2KΩ	028571
R37	Resistor, 22KΩ, ½W, 5%	028365
R38, 39	Resistor, 270KΩ	028340
R40	Resistor, 12KΩ, 1W, 10%	028035
R41	Resistor, 470Ω	028068
R42	Resistor, 33Ω, 1W, 10%	028332
R43	Resistor, 22KΩ, ½W, 5%	028365
S7, S7RV, S11	Socket, 2 Contact	029298
T3	Transformer, Power, 117V, 50/60Hz	061523
T4	Transformer, Output	025411
V6	Tube, 12AU7A	029033
V7, 8	Tube, 7189	029025
V9	Tube, OB2	029017
FZ2	Fuse, ¾A, 250V, Slo-Blo	029884
Not Shown	Contact, Socket, Miniature (for M1, M2)	028670
Not Shown	Tube Socket, 9 Contact	028449
Not Shown	Tube Socket, 7 Contact	029306

NOTE: All resistors ½W, 10% unless otherwise noted.

PRINTED IN U.S.A.